V64 MLB BG

PROTO-2

REV	ECN	DESCRIPTION OF REVISION	CK APPD / DATE
4	0073816450	ENGINEERING RELEASED	2025-11-19

SHEET	PAGE/CSA	CONTENTS	SYNC LABEL	SYNC DATE
1	1	TABLE OF CONTENTS		
2	2	SYSTEM: BOM Tables (1/2)	v63_ap_source_951-25670_0.98.0	04/16/2025
3	3	SYSTEM: BOM Tables (2/2)	v63_ap_source_951-25670_0.98.0	04/16/2025
4	9	SYSTEM: Conventions	v63_ap_source_951-25670_0.98.0	04/16/2025
5	44	SYS PWR: Wireless Charger	v63_ap_source_951-25670_0.98.0	04/16/2025
6	50	SYS PWR: NTCs (Bottom)	v63_ap_source_951-25670_0.98.0	04/16/2025
7	61	CAMERA: Actuator Supply (Avedon)	v63_mlb_bg_051-12694_1.1.0	06/04/2025
8	63	CAMERA: OIS/AF (Austin)	v63_ap_source_951-25670_0.98.0	04/16/2025
9	65	CAMERA: Strobe Driver	v63_ap_source_951-25670_0.98.0	04/16/2025
10	73	SENSORS: Accel / Gyro	v63_ap_source_951-25670_0.98.0	04/16/2025
11	80	AUDIO: Bot Speaker Amp	v63_ap_source_951-25670_0.98.0	04/16/2025
12	81	AUDIO: Top Speaker Amp	v63_ap_source_951-25670_0.98.0	04/16/2025
13	83	HAPTIC: Haptic Amp	v63_ap_source_951-25670_0.98.0	04/16/2025
14	91	TOP MODULE: Display BUBO/LDO	v63_mlb_bg_051-12694_2.26.0	07/18/2025
15	92	TOP MODULE: Touch Power	v63_ap_source_951-25670_0.98.0	04/16/2025
16	93	TOP MODULE: Ciro-Lite	v63_ap_source_951-25670_0.98.0	04/16/2025
17	104	B2B: Ironman	v63_mlb_bg_051-12694_0.93.0	06/01/2025
18	120	B2B: UAT1/UAT2 (1/2)	v63_ap_source_951-25670_0.98.0	04/16/2025
19	121	B2B: UAT1/UAT2 (2/2)	v63_ap_source_951-25670_0.98.0	04/16/2025
20	146	SYSTEM: General Aliases	v63_ap_source_951-25670_0.98.0	04/16/2025
21	151	INTERPOSER: BG (1/2)	Interposer	05/28/2025
22	152	INTERPOSER: BG (2/2)	Interposer	05/28/2025
23	154	INTERPOSER: Aliases (1/3)	Interposer	05/28/2025
24	155	INTERPOSER: Aliases (2/3)	Interposer	05/28/2025
25	156	INTERPOSER: Aliases (3/3)	Interposer	05/28/2025
26	302	SYSTEM: FF Specific Aliases (BG)	v63_ap_source_951-25670_0.98.0	04/16/2025
27	328	TESTING: Test Points (BG)	v63_mlb_bg_051-12694_0.69.0	05/17/2025
28	330	TESTING: Probe Points (BG)	v64_mlb_bg_051-12836_0.35.0	05/17/2025
29	333	HIERARCHIES: ARROW		
30	346	HIERARCHIES: NFC		
31	347	HIERARCHIES: WIFI		
32	348	HIERARCHIES: RADIO	V5x BG RF Hiers	05/10/2024
33	1	Table	v64_hier_arrow_051-12835_0.9.0	10/16/2025
34	2	Interface	v64_hier_arrow_051-12835_0.9.0	10/16/2025
35	3	Tanami	v64_hier_arrow_051-12835_0.9.0	10/16/2025
36	4	Tanami_FE	v64_hier_arrow_051-12835_0.9.0	10/16/2025
37	5	Filter_matching	v64_hier_arrow_051-12835_0.9.0	10/16/2025
38	1	Table of Contents	v64_hier_radio_bg_951-26236_0.79.0	11/18/2025
39	2	PORTS	v64_hier_radio_bg_951-26236_0.79.0	11/18/2025
40	3	PMIC: BUCKs	v64_hier_radio_bg_951-26236_0.79.0	11/18/2025
41	4	PMIC: LDOs	v64_hier_radio_bg_951-26236_0.79.0	11/18/2025
42	5	PMIC: ANALOG, IO	v64_hier_radio_bg_951-26236_0.79.0	11/18/2025
43	6	PMK: CLOCK GEN	v64_hier_radio_bg_951-26236_0.79.0	11/18/2025
44	7	BB: POWER1	v64_hier_radio_bg_951-26236_0.79.0	11/18/2025
45	8	BB: POWER2	v64_hier_radio_bg_951-26236_0.79.0	11/18/2025
46	9	BB: GND	v64_hier_radio_bg_951-26236_0.79.0	11/18/2025
47	10	BB: PCIE & QLINK	v64_hier_radio_bg_951-26236_0.79.0	11/18/2025
48	11	BB: GPIOs	v64_hier_radio_bg_951-26236_0.79.0	11/18/2025
49	12	PSIM	v64_hier_radio_bg_951-26236_0.79.0	11/18/2025
50	13	ESIM	v64_hier_radio_bg_951-26236_0.79.0	11/18/2025
51	14	BLANK	v64_hier_radio_bg_951-26236_0.79.0	11/18/2025
52	15	XCVR POWER	v64_hier_radio_bg_951-26236_0.79.0	11/18/2025
53	16	XCVR DIGITAL & GND	v64_hier_radio_bg_951-26236_0.79.0	11/18/2025
54	17	XCVR RF	v64_hier_radio_bg_951-26236_0.79.0	11/18/2025
55	18	QET0	v64_hier_radio_bg_951-26236_0.79.0	11/18/2025
56	19	QET1	v64_hier_radio_bg_951-26236_0.79.0	11/18/2025
57	20	RF FE SYNONYMS	v64_hier_radio_bg_951-26236_0.79.0	11/18/2025
58	21	LB PAD	v64_hier_radio_bg_951-26236_0.79.0	11/18/2025
59	22	HB PAD RF	v64_hier_radio_bg_951-26236_0.79.0	11/18/2025
60	23	HB PAD GND & RF CONSTRAINTS	v64_hier_radio_bg_951-26236_0.79.0	11/18/2025
61	24	UHB PAD LAT	v64_hier_radio_bg_951-26236_0.79.0	11/18/2025
62	25	LB DSM	v64_hier_radio_bg_951-26236_0.79.0	11/18/2025
63	26	HB TXDSM	v64_hier_radio_bg_951-26236_0.79.0	11/18/2025
64	27	HB TXDSDM GND	v64_hier_radio_bg_951-26236_0.79.0	11/18/2025
65	28	UHB PAD UAT	v64_hier_radio_bg_951-26236_0.79.0	11/18/2025
66	29	MIMO DSM LOWER	v64_hier_radio_bg_951-26236_0.79.0	11/18/2025
67	30	MIMO DSM UPPER	v64_hier_radio_bg_951-26236_0.79.0	11/18/2025
68	31	DISCRETE GNSS	v64_hier_radio_bg_951-26236_0.79.0	11/18/2025
69	32	GNSS_L1	v64_hier_radio_bg_951-26236_0.79.0	11/18/2025
70	33	GNSS_L5	v64_hier_radio_bg_951-26236_0.79.0	11/18/2025
71	34	COUPLER LOWER	v64_hier_radio_bg_951-26236_0.79.0	11/18/2025
72	35	COUPLER UPPER	v64_hier_radio_bg_951-26236_0.79.0	11/18/2025
73	36	BLANK	v64_hier_radio_bg_951-26236_0.79.0	11/18/2025
74	37	BLANK	v64_hier_radio_bg_951-26236_0.79.0	11/18/2025
75	38	LOWER ANTENNA FEEDS_ANT1_3	v64_hier_radio_bg_951-26236_0.79.0	11/18/2025
76	39	LOWER ANTENNA FEEDS_ANT7	v64_hier_radio_bg_951-26236_0.79.0	11/18/2025
77	40	LOWER ANTENNA FEEDS_ANT8	v64_hier_radio_bg_951-26236_0.79.0	11/18/2025
78	41	LOWER ANTENNA FEEDS_ANT9	v64_hier_radio_bg_951-26236_0.79.0	11/18/2025
79	42	UPPER ANTENNA FEEDS_ANT2_4_10R	v64_hier_radio_bg_951-26236_0.79.0	11/18/2025
80	43	BLANK	v64_hier_radio_bg_951-26236_0.79.0	11/18/2025
81	44	LAT UAT ST BRIDGES	v64_hier_radio_bg_951-26236_0.79.0	11/18/2025
82	45	BLANK	v64_hier_radio_bg_951-26236_0.79.0	11/18/2025
83	46	MMW B2B: IF & POWER	v64_hier_radio_bg_951-26236_0.79.0	11/18/2025
84	47	BLANK	v64_hier_radio_bg_951-26236_0.79.0	11/18/2025
85	48	DBG & PPs	v64_hier_radio_bg_951-26236_0.79.0	11/18/2025
86	49	BOM TABLES	v64_hier_radio_bg_951-26236_0.79.0	11/18/2025
87	1	Table of Contents	v64_hier_wifi_bg_051-12834_0.17.0	10/16/2025
88	2	Hierarchy IOs	v64_hier_wifi_bg_051-12834_0.17.0	10/16/2025
89	3	Tencha	v64_hier_wifi_bg_051-12834_0.17.0	10/16/2025
90	4	Tencha_Power	v64_hier_wifi_bg_051-12834_0.17.0	10/16/2025
91	5	2G4 rFEM (LAT)	v64_hier_wifi_bg_051-12834_0.17.0	10/16/2025
92	6	2G4 rFEM (UAT)	v64_hier_wifi_bg_051-12834_0.17.0	10/16/2025
93	7	7G rFEM (UAT)	v64_hier_wifi_bg_051-12834_0.17.0	10/16/2025
94	8	7G rFEM (LAT)	v64_hier_wifi_bg_051-12834_0.17.0	10/16/2025
95	1	TOC	v63_hier_nfc_bg_051-12838_0.21.0	11/18/2025
96	2	HIERARCHY_IOS	v63_hier_nfc_bg_051-12838_0.21.0	11/18/2025
97	3	NFC_F	v63_hier_nfc_bg_051-12838_0.21.0	11/18/2025
98	4	NFC_P	v63_hier_nfc_bg_051-12838_0.21.0	11/18/2025
99	5	NFC_F_FE	v63_hier_nfc_bg_051-12838_0.21.0	11/18/2025
100	6	NFC_P_FE	v63_hier_nfc_bg_051-12838_0.21.0	11/18/2025

PART NUMBER	REFERENCE DESIGNATORS	CRITICAL	QTY	DESCRIPTION
051-12836	SCH	CRITICAL	1	SCH,MLB,BG,V64
820-04340	PCB	CRITICAL	1	PCB,MLB,BG,V64

Table1 PACK_OPTIONS Table

Pack Option	On / Off	Comment
DEV	OFF	
MLB	ON	
NFC_XTAL_V64	ON	
V62	OFF	
V64_BG	ON	
V6X	ON	
X7956	OFF	

DRAWING TITLE: SCH,MLB,BG,V64

Apple Inc.

DRAWING NUMBER: 051-12836 SIZE: D

REVISION: 4.0.0

BRANCH: proto-2

PAGE: 1 OF 348

SHEET: 1 OF 100

NOTICE OF PROPRIETARY PROPERTY:

THE INFORMATION CONTAINED HEREIN IS THE PROPRIETARY PROPERTY OF APPLE INC.
THE POSESSOR AGREES TO THE FOLLOWING:
I TO MAINTAIN THIS DOCUMENT IN CONFIDENCE
II NOT TO REPRODUCE OR COPY IT
III NOT TO REVEAL OR PUBLISH IT IN WHOLE OR PART
IV ALL RIGHTS RESERVED

Multi-Vendor Criticals

Capacitors

In descending order of value, then package size

PART NUMBER	COMMENT
138S0979	CAP,CER,X5R,10UF,20%,10V,0402,H=0.65MM
138S00070	CAP,X5R,4.7UF,20%,25V,0402
138S00009	CAP,X5R,4.7UF,20%,6.3V,0402,H=0.33MM
138S0968	CAP,X5R,4.2UF,10%,16V,0402,H=0.55MM
138S00044	CAP,CER,X6S,1UF,20%,10V,0201
138S0692	CAP,CER,X5R,1UF,20%,6.3V,0201
138S0838	CAP,CER,X5R,1UF,10%,6.3V,0201
132S0534	CAP,CER,X5R,0.1UF,10%,25V,0201
132S0288	CAP,CER,X5R,0.1UF,10%,16V,0201
132S0245	CAP,CER,X5R,0.01UF,10%,6.3V,01005
132S00283	CAP,CER,X5R,6800PF,10%,16V,01005
132S0473	CAP,CER,X5R,3900PF,10%,6.3V,01005
132S0396	CAP,CER,X5R,1000PF,10%,10V,01005
132S0296	CAP,CER,X5R,1000PF,10%,6.3V,01005
132S0275	CAP,CER,X5R,470PF,10%,10V,01005
132S00258	CAP,CER,X7R,330PF,10%,16V,01005
131S0883	CAP,CER,NPO/COG,220PF,2%,50V,0201
131S00170	CAP,CER,COG,220PF,5%,25V,01005
131S00543	CAP,CER,COG,220PF,5%,25V,01005 (NO KYO)
131S00157	CAP,CER,COG,120PF,5%,25V,01005
131S00057	CAP,CER,NPO/COG,100PF,5%,35V,01005
131S00150	CAP,CER,NPO/COG,100PF,5%,25V,01005
131S00346	CAP,CER,NPO/COG,100PF,5%,16V,01005,KYO
138S1068	CAP,CER,X5R,4.7UF,20%,16V,0402,H=0.55MM

PART NUMBER	COMMENT
131S00731	CAP,CER,NPO/COG,56PF,5%,25V,01005
131S00740	CAP,CER,NPO/COG,47PF,5%,16V,01005
131S00742	CAP,CER,NPO/COG,33PF,5%,16V,01005
131S00291	CAP,CER,NPO/COG,27PF,5%,16V,01005
131S00378	CAP,CER,COG,22PF,2%,16V,01005
131S00741	CAP,CER,COG,22PF,5%,16V,01005
131S00732	CAP,CER,NPO/COG,18PF,5%,16V,01005
131S00293	CAP,CER,NPO/COG,12PF,5%,16V,01005
131S00333	CAP,CER,COG,10PF,2%,25V,01005
131S00353	CAP,CER,NPO/COG,10PF,5%,16V,01005
131S00382	CAP,CER,NPO/COG,5.6PF,+/-0.1PF,16V,01005
131S00383	CAP,CER,NPO/COG,4.7PF,+/-0.1PF,16V,01005

Misc.

PART NUMBER	COMMENT
118S00202	RES,MF,49.9OHM,1%,1/32W,01005

2020 MLCCs

16uF, 0402, 4V

ALTERNATE PART NO.	PRIMARY PART NO.	REFERENCE DESIGNATORS	COMMENT
138S00314	138S00313	ALL	CAP,X5R,16UF,20%,4V,M,0402

Primary: Murata
Taiyo
Kyocera
Samsung

13uF, 0402, 6.3V

ALTERNATE PART NO.	PRIMARY PART NO.	REFERENCE DESIGNATORS	COMMENT
138S00388	138S00406	ALL	CAP,X5R,9UF,20%,6.3V,4.9@3V,SAM,0402

Primary: Murata
Kyocera
Samsung

11uF, 0402, 4V

ALTERNATE PART NO.	PRIMARY PART NO.	REFERENCE DESIGNATORS	COMMENT
138S00318	138S00317	ALL	CAP,X5R,11UF,20%,4V,M,0402-3T
138S00319	138S00317	ALL	CAP,X5R,11UF,20%,4V,M,0402-3T
138S00320	138S00317	ALL	CAP,X5R,11UF,20%,4V,M,0402-3T

Primary: Murata
Kyocera
Samsung
Taiyo

2.7uF, 0201, 6.3V

ALTERNATE PART NO.	PRIMARY PART NO.	REFERENCE DESIGNATORS	COMMENT
138S00326	138S00325	ALL	CAP,X5R,2.7UF,20%,6.3V,M,0201
138S00327	138S00325	ALL	CAP,X5R,2.7UF,20%,6.3V,M,0201

Primary: Murata
Kyocera
Samsung

2.7uF, 0201, 4V

ALTERNATE PART NO.	PRIMARY PART NO.	REFERENCE DESIGNATORS	COMMENT
138S00324	138S00321	ALL	CAP,X5R,2.7UF,20%,4V,M,0201
138S00322	138S00321	ALL	CAP,X5R,2.7UF,20%,4V,M,0201
138S00323	138S00321	ALL	CAP,X5R,2.7UF,20%,4V,M,0201

Primary: Murata
Taiyo
Kyocera
Samsung

PART NUMBER	COMMENT
138S00313	CAP,CER,X5R,16UF,20%,4V,0402
138S00406	CAP,CER,X5R,13UF,20%,6.3V,0402
138S00317	CAP,CER,X5R,11UF,20%,4V,0402-3T

PART NUMBER	COMMENT
138S00325	CAP,CER,X5R,2.7UF,20%,6.3V,0201
138S00321	CAP,CER,X5R,2.7UF,20%,4V,0201
138S00512	CAP,X5R,5UF,20%,16V,1.2UF@8V,S,HZL,0402

GEN3 MLCC

Capacitor Alternates

27pF, 01005

ALTERNATE PART NO.	PRIMARY PART NO.	REFERENCE DESIGNATORS	COMMENT
131S00827	131S00482	ALL	YAGEO,CAP,C0G,27PF,2%,25V,01005

PART NUMBER	COMMENT
131S00482	CAP,CER,NPO/COG,27PF,2%,25V,01005

1000pF, 0201

ALTERNATE PART NO.	PRIMARY PART NO.	REFERENCE DESIGNATORS	COMMENT
131S00329	131S00025	ALL	CAP,C0G,1000PF,2%,25V,TAIYO,0201

PART NUMBER	COMMENT
131S00025	CAP,C0G,1000PF,2%,25V,0201

2200pF, 01005

ALTERNATE PART NO.	PRIMARY PART NO.	REFERENCE DESIGNATORS	COMMENT
132S00308	132S0420	ALL	CAP,X5R,2200PF,10%,16V,01005,Kyocera

PART NUMBER	COMMENT
132S0420	CAP,X5R,2200PF,10%,16V,01005,Taiyo

0.1uF, 01005, 6.3V

ALTERNATE PART NO.	PRIMARY PART NO.	REFERENCE DESIGNATORS	COMMENT
132S00107	132S00253	ALL	CAP,CER,X5R,0.1UF,20%,6.3V,01005
132S00498	132S00253	ALL	CAP,CER,X5R,0.1UF,20%,6.3V,01005
132S00154	132S0683	ALL	CAP,CER,X5R,0.1UF,10%,6.3V,01005

PART NUMBER	COMMENT
132S0316	01005,0.1uF, 6.3V

0.1uF, 01005, 10V

ALTERNATE PART NO.	PRIMARY PART NO.	REFERENCE DESIGNATORS	COMMENT
132S00199	132S00200	ALL	CAP,CER,X5R,0.1UF,20%,10V,01005,Murata
132S00204	132S00200	ALL	CAP,CER,X5R,0.1UF,20%,10V,01005,Kyocera
132S00371	132S00260	ALL	CAP,CER,X5R,0.1UF,10%,10V,01005,Taiyo

PART NUMBER	COMMENT
132S00200	01005,0.1uF,10V,Taiyo
132S00260	01005,0.1uF,10V,Murata

0.22uF, 01005

RefDes field intentionally left blank to allow selective single-sourcing

ALTERNATE PART NO.	PRIMARY PART NO.	COMMENT
132S00304	132S00014	01005,0.22uF,6.3V,Kyocera

PART NUMBER	COMMENT
132S00014	01005,0.22uF, 6.3V

0.47uF, 01005

ALTERNATE PART NO.	PRIMARY PART NO.	REFERENCE DESIGNATORS	COMMENT
138S00128	138S00412	ALL	01005,0.47uF,6.3V,Kyocera
138S00269	138S00412	ALL	01005,0.47uF,6.3V,Taiyo
138S00519	138S00412	ALL	01005,0.47uF,6.3V,Semco

PART NUMBER	COMMENT
138S00412	01005,0.47uF, 6.3V

0.47uF, 0201

ALTERNATE PART NO.	PRIMARY PART NO.	REFERENCE DESIGNATORS	COMMENT
132S00088	132S0639	ALL	CAP,CER,X5R,0.47UF,20%,25V,0201,Taiyo

PART NUMBER	COMMENT
132S0639	CAP,X5R,0.47UF,20%,25V,0201,Murata

1uF, 0201,10V

ALTERNATE PART NO.	PRIMARY PART NO.	REFERENCE DESIGNATORS	COMMENT
138S0739	138S0706	ALL	CAP,CER,X5R,1UF,20%,10V,0201,SAMSUNG
138S0945	138S0706	ALL	CAP,CER,X5R,1UF,20%,10V,0201,KYOCERA

PART NUMBER	COMMENT
138S0706	CAP,X5R,1UF,20%,10V,0201

1uF, 0201,16V

ALTERNATE PART NO.	PRIMARY PART NO.	REFERENCE DESIGNATORS	COMMENT
138S00517	138S00014	ALL	CAP,X5R,1UF,20%,16V,KYO,0201,H=0.39MM
138S00085	138S00014	ALL	CAP,X5R,1UF,20%,16V,MUR,0201,H=0.39MM

PART NUMBER	COMMENT
138S00014	CAP,CER,X5R,1UF,20%,16V,0201,H=0.39MM

2.2uF, 0201

RefDes field intentionally left blank to allow selective single-sourcing

PART NUMBER	COMMENT
138S00450	CAP,CER,X5R,2.2UF,20%,6.3V,NON-SG,0201,MURATA
138S0831	CAP,CER,X5R,2.2UF,20%,6.3V,0201,MURATA

2.2uF, 0201,10V

ALTERNATE PART NO.	PRIMARY PART NO.	REFERENCE DESIGNATORS	COMMENT
138S00472	138S00471	ALL	0201,2.2uF@10V,20%,KYO
138S00480	138S00471	ALL	CAP,X5R,1.5UF,20%,10V, 0.58@5V,HZT,S,0201,SEMCO

PART NUMBER	COMMENT
138S00471	CAP,CER,X5R,2.2UF,20%,10V,0201,MURATA

3uF @ 1V, 0201

ALTERNATE PART NO.	PRIMARY PART NO.	REFERENCE DESIGNATORS	COMMENT
138S00138	138S00139	ALL	0201,3uF@1V,KYOCERA
138S00164	138S00139	ALL	0201,3uF@1V,TAIYO
138S00280	138S00139	ALL	0201,3uF@1V,SAMSUNG

PART NUMBER	COMMENT
138S00139	0201,3uF@1V

3.9uF, 0201,6.3V

ALTERNATE PART NO.	PRIMARY PART NO.	REFERENCE DESIGNATORS	COMMENT
138S00439	138S00444	ALL	0201,4.3uF,6.3V,Murata
138S00440	138S00444	ALL	0201,2.5uF,6.3V,Samsung

PART NUMBER	COMMENT
138S00444	0201,3.9UF,6.3V,KYO

4uF, 0201

RefDes field intentionally left blank to allow selective single-sourcing

ALTERNATE PART NO.	PRIMARY PART NO.	REFERENCE DESIGNATORS	COMMENT
138S00117	138S00071	ALL	0201,4uF,X5R,6.3V,Kyocera
138S00515	138S00071	ALL	0201,4uF,X5R,6.3V,SEMCO

PART NUMBER	COMMENT
138S00071	0201,X5R,4UF,0201,0.55MM,MURATA

4.7uF, 0201

ALTERNATE PART NO.	PRIMARY PART NO.	REFERENCE DESIGNATORS	COMMENT
138S00443	138S00441	(CS602)	0201H.55,4.7UF,20%,4V,3UF@1V,Kyocera
138S00455	138S00441	ALL	0201H.55,4.7UF,20%,4V,3UF@1V,Samsung
138S00486	138S00441	ALL	0201H.55,4.4UF,20%,4V,3UF@1V,Taiyo

4.3uF, 0201

PART NUMBER	COMMENT
138S00441	0201H.55,4.3uF,4V,3UF@1V,Murata

4.7uF, 0402

ALTERNATE PART NO.	PRIMARY PART NO.	REFERENCE DESIGNATORS	COMMENT
138S1103	138S0719	ALL	CAP,CER,X5R,4.7UF,20%,10V,0402

PART NUMBER	COMMENT
138S0719	0402,4.7uF,10V

10uF @ 1V, 4-Term

ALTERNATE PART NO.	PRIMARY PART NO.	REFERENCE DESIGNATORS	COMMENT
138S00148	138S00149	ALL	0402-3T,10.5uF@1V, Kyocera
138S00150	138S00149	ALL	0402-3T,10.5uF@1V, SEMCO
138S00151	138S00149	ALL	0402-3T,10.5uF@1V, TY

PART NUMBER	COMMENT
138S00149	0402-3T,10.5uF@1V

15uF, 0402

RefDes field intentionally left blank to allow selective single-sourcing

18uF, 0402

ALTERNATE PART NO.	PRIMARY PART NO.	REFERENCE DESIGNATORS	COMMENT
138S00221	138S00146	ALL	CAP,CER,X5R,18UF,20%,6.3V,KYO,0402
138S00433	138S00434	ALL	CAP,X5R,18UF,20%,6.3V,M,0402, Kyocera
138S00435	138S00434	ALL	CAP,X5R,18UF,20%,6.3V,M,0402, Samsung

PART NUMBER	COMMENT
138S00146	CAP,CER,X5R,18UF,20%,6.3V,MUR,0402
138S00434	CAP,X5R,18UF,20%,6.3V,M,0402

20uF, 0402

RefDes field intentionally left blank to allow selective single-sourcing

ALTERNATE PART NO.	PRIMARY PART NO.	COMMENT
138S00338	138S0884	Kyocera
138S00339	138S0884	Taiyo
138S00394	138S0884	Semco

PART NUMBER	COMMENT
138S0884	CAP,CER,X5R,20UF,20%,6.3V,0402,H=0.7MM

22uF, 0402, H0.8MM

ALTERNATE PART NO.	PRIMARY PART NO.	REFERENCE DESIGNATORS	COMMENT
138S00349	138S00348	ALL	CAP,X5R,22UF,20%,4V,MURATA,0402,H0.8
138S00390	138S00348	ALL	CAP,X5R,22UF,20%,4V,MURATA,0402,H0.8
138S00386	138S00348	ALL	CAP,X5R,22UF,20%,4V,MURATA,0402,H0.8

PART NUMBER	COMMENT
138S00348	CAP,X5R,22UF,20%,4V,MURATA,0402,H0.8

22uF, 0704

ALTERNATE PART NO.	PRIMARY PART NO.	REFERENCE DESIGNATORS	COMMENT
138S00347	138S00296	ALL	CAP,CER,X5R,22UF,20%,16V,TAIYO,H=0.8MM,0704
138S00453	138S00296	ALL	CAP,CER,X5R,22UF,20%,16V,KYO,H=0.8MM,0704

PART NUMBER	COMMENT
138S00296	CAP,CER,X5R,22UF,20%,16V,0402,H=0.8MM

PART NUMBER	BOMOPTION	REFERENCE DESIGNATORS	CRITICAL	QTY	DESCRIPTION
685-00833	BOARD_REV:PROTO2	SUBBOM_BUBO	CRITICAL	1	SUBBOM,MLB,BG,BUBO,ADI,V64

SYNCING: V5X,V57,D23

PAGE TITLE
SYSTEM: BOM Tables (1/2) (2)

Apple Inc.

DRAWING NUMBER 051-12836
SIZE D
REVISION 4.0.0
BRANCH proto-2
PAGE 2 OF 348
SHEET 2 OF 100

NOTICE OF PROPRIETARY PROPERTY:
THE INFORMATION CONTAINED HEREIN IS THE PROPRIETARY PROPERTY OF APPLE INC.
THE POSESSOR AGREES TO THE FOLLOWING:
I TO MAINTAIN THIS DOCUMENT IN CONFIDENCE
II NOT TO REPRODUCE OR COPY IT
III NOT TO REVEAL OR PUBLISH IT IN WHOLE OR PART
IV ALL RIGHTS RESERVED

MAV23 PDN Single-source

0.22uF, 01005

All RefDes in ( ) are dual-sourced from Murata/Kyocera

ALTERNATE PART NO.	PRIMARY PART NO.	REFERENCE DESIGNATORS	COMMENT
132S00304	132S00014	(C*_E)	01005,0.22uF,6.3V,Kyocera

2.2uF, 0201

All RefDes in ( ) are single-sourced from Murata

ALTERNATE PART NO.	PRIMARY PART NO.	REFERENCE DESIGNATORS	COMMENT
138S00049	138S0831	(C*_E)	KYO,CAP,CER,X5R,2.2UF,20%,6.3V,0201
138S00646	138S0831	(C*_E)	KYO,CAP,CER,X5R,2.2UF,20%,6.3V,0201

4uF, 0201

All RefDes in ( ) are single-sourced from Murata

ALTERNATE PART NO.	PRIMARY PART NO.	REFERENCE DESIGNATORS	COMMENT
138S00117	138S00071	(C*_E)	0201,4uF,X5R,6.3V,Kyocera
138S00515	138S00071	(C*_E)	0201,4uF,X5R,6.3V,SEMCO

138S00116 (Taiyo 4uF) is used as ALT to 138S00071 for all MAV caps

Refer to the global ALT tables on pg2 for details

15uF, 0201

All RefDes in ( ) are single-sourced from Murata

Level Shifter Alternates

ALTERNATE PART NO.	PRIMARY PART NO.	REFERENCE DESIGNATORS	COMMENT
311S00231	311S00232	ALL	IC,74AVC2T45,XCVR,2 BIT,2 SPLY,X2SON8
311S00230	311S00212	ALL	IC,74AXC1T45,XCVR,1 BIT,2 SPLY,X2SON6
311S00261	311S00233	ALL	IC,LSF0101,XCVR,2 BIT,2 SPLY,X2SON6
311S00348	311S00235	ALL	IC,SGM4542V,XCVR,2 BIT,2 SPLY,BIDI,DFN8

PART NUMBER	COMMENT
311S00232	IC,74AVC2T45,XCVR,2 BIT,2 SPLY,X2SON8
311S00230	IC,74AVC1T45,XCVR,1 BIT,2 SPLY,X2SON6
311S00233	IC,LSF0101,XCVR,2 BIT,2 SPLY,X2SON6
311S00235	IC,NVT0202,XCVR,2 BIT,2 SPLY,BIDI,DFN8

Power Inductor Alternates

ALTERNATE PART NO.	PRIMARY PART NO.	REFERENCE DESIGNATORS	COMMENT
152S00721	152S00876	ALL	Taiyo,IND,MLD,1UH,3.6A,60MO,2016
152S01513	152S00897	ALL	IND,CPLD,0.1UH,20%,5.5A,20MO,2016
152S00826	152S00821	ALL	Taiyo,IND,MLD,1UH,2.2A,60MO,2012
152S01771	152S02293	ALL	Taiyo,IND,MLD,0.22UH,5.3A,40MO,1608
152S00979	152S00874	ALL	Taiyo,IND,MLD,0.47UH,1.7A,175MO,0402
152S00991	152S00984	ALL	Taiyo,IND,MLD,0.47UH,3.5A,34MO,1614
152S01563	152S00985	ALL	Taiyo,IND,MLD,0.47UH,4.0A,45MO,H=0.65MM,2012
152S01770	152S00982	ALL	Taiyo,IND,MULT,0.47UH,2.8A,70MO,1608
152S00824	152S00819	ALL	Taiyo,IND,MLD,1UH,20%,2A,69MO,H=0.65,2012
152S01396	152S01397	ALL	Taiyo,IND,CPLD,220NH,7A,25MO,H=0.8,2016
152S01394	152S01395	ALL	Taiyo,IND,CPLD,100NH,8.1A,15MO,H=0.8,2016
152S00825	152S00823	ALL	Taiyo,IND,MLD,1UH,20%,3A,60MO,H=0.65,2016
152S00994	152S00987	ALL	Taiyo,IND,MLD,1.0UH,1.5A,67MO,H=0.65,2012
152S01793	152S00847	ALL	TDK,IND,MLD,0.47UH,5.3A,33MO,H=0.8,2016
152S01547	152S00847	ALL	TAIYO,IND,MLD,0.47UH,5.6A,30MO,H=0.8,2016
152S00869	152S00871	ALL	CYNTEC,IND,MLD,0.47UH,5.6A,30MO,H=0.8,2016
152S01578	152S01255	ALL	TAIYO,IND,PWR,0.47UH,3.8A,39MO,H=0.65,2016
152S01811	152S01810	ALL	CYNTEC,IND,CPLD,220NH,20%,5.4A,30MO,0.65MM,2016
152S01952	152S01397	ALL	SEMCO,IND,CPLD,220NH,7.0A,25MO,2016
152S01953	152S01395	ALL	SEMCO,IND,CPLD,100NH,8.5A,14MO,2016
152S02390	152S02127	L3330	Microgate,IND,MLD,0.47UH,3.5A,40MO,2012HG.65

PART NUMBER	COMMENT
152S00876	Cyntec,IND
152S00897	Taiyo,IND
152S00821	Cyntec,IND
152S02293	Cyntec,IND
152S00874	Cyntec,IND
152S00984	Cyntec,IND
152S00985	Cyntec,IND
152S00982	Cyntec,IND
152S00819	Cyntec,IND
152S01397	Cyntec,IND
152S01395	Cyntec,IND
152S00823	Cyntec,IND
152S00987	Cyntec,IND

ZRX Cap ALTs

ALTERNATE PART NO.	PRIMARY PART NO.	REFERENCE DESIGNATORS	COMMENT
138S00187	138S00240	ALL	CAP,X5R,4.7UF,20%,25V,0402
138S00185	138S00246	ALL	CAP,X5R,2.2UF,20%,25V,0402

PART NUMBER	COMMENT
138S00240	CAP,X5R,4.7UF,20%,25V,0402
138S00246	CAP,X5R,2.2UF,20%,25V,0402

Display Choke Alternates

ALTERNATE PART NO.	PRIMARY PART NO.	REFERENCE DESIGNATORS	COMMENT
155S0577	155S0960	ALL	FERR BD,70 OHM,25%,300MA,0.45 DCR,01005

PART NUMBER	COMMENT
155S00524	FLTR,NOISE,35 OHMZ,3 OHM,7GHZ,50MA,0403

Misc. Alternates

ALTERNATE PART NO.	PRIMARY PART NO.	REFERENCE DESIGNATORS	COMMENT
155S00437	155S00402	ALL	FERR BD,33OHM,25%,1.5A,55MOHM DCR,0201
155S00194	155S00400	ALL	FERR BD,150OHM,25%,200MA,0.7OHM DCR,01005
155S00131	155S0755	ALL	FERR BD,240OHM,25%,200MA,1.0OHM DCR,01005
155S00583	155S00140	ALL	FERR BD,330OHM,25%,400MA,0.20DCR,01005
377S00070	377S00001	ALL	TVS,BIDIR,5.8V,6PF,01005
377S00140	377S00001	ALL	TVS,BIDIR,5V,6PF,01005
107S0245	107S00539	ALL	THERMISTOR,NTC,100K OHM,1%,B=4250,01005
155S00700	155S01011	ALL	FLTR,-30DB@0.6-1.55GHZ,1-LINE,ESD,LGA3,ONSEMI
155S00706	155S01011	ALL	FLTR,-30DB@0.6-1.55GHZ,1-LINE,ESD,LGA3,INFINEON
377S00173	377S0183	ALL	SUPPR,TRANS,BIDIR,5.5V,6.2PF,0201
377S00061	377S0183	ALL	SUPPR,TRANS,BIDIR,5.5V,6.2PF,0201
371S00287	371S00395	ALL	DIODE,ZENER,200MW,5.1V,5MA,0201

PART NUMBER	COMMENT
155S00402	FERR BD,33OHM,25%,1.5A,55MOHM DCR,0201
155S00400	FERR BD,150OHM,25%,200MA,0.7OHM DCR,01005
155S0755	FERR BD,240 OHM,25%,200MA,1.0 DCR,01005
155S00140	FERR BD,33OHM,25%,400MA,0.20DCR,01005
377S00001	TVS,BIDIR,5.8V,6PF,01005
377S00129	SUPRESS,TRANS,6.8V,100PF,01005
107S00539	THERMISTOR,NTC,100K OHM,1%,B=4250,01005
155S01011	FLTR,-30DB@0.6-1.55GHZ,1-LINE,ESD,LGA3
377S0183	SUPPR,TRANS,BIDIR,5.5V,6.2PF,0201

SYNCING: V5X,V57,D23

PAGE TITLE: SYSTEM: BOM Tables (2/2) (3)

Apple Inc.

DRAWING NUMBER: 051-12836 SIZE: D

REVISION: 4.0.0

BRANCH: proto-2

PAGE: 3 OF 348

SHEET: 3 OF 100

NOTICE OF PROPRIETARY PROPERTY:

THE INFORMATION CONTAINED HEREIN IS THE PROPRIETARY PROPERTY OF APPLE INC.
THE POSESSOR AGREES TO THE FOLLOWING:
I TO MAINTAIN THIS DOCUMENT IN CONFIDENCE
II NOT TO REPRODUCE OR COPY IT
III NOT TO REVEAL OR PUBLISH IT IN WHOLE OR PART
IV ALL RIGHTS RESERVED

Conventions:

1. All net names and notes should use font size 0.112 (8 if you use the group tool)
2. Nets which are not connected on FFs but probed out on dev board should start with "NC_DEV_"
3. Nets that contain "_1V8" are 1.8V logic, all other nets are implied 1.2V logic
4. Components with PACK_IGNORE=TRUE will not be included in the netlist

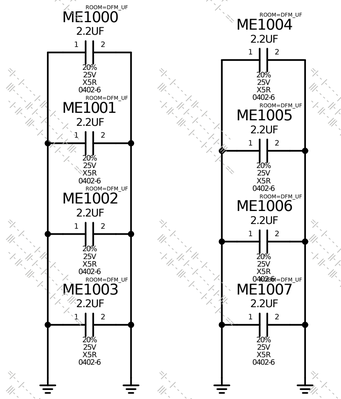

Top

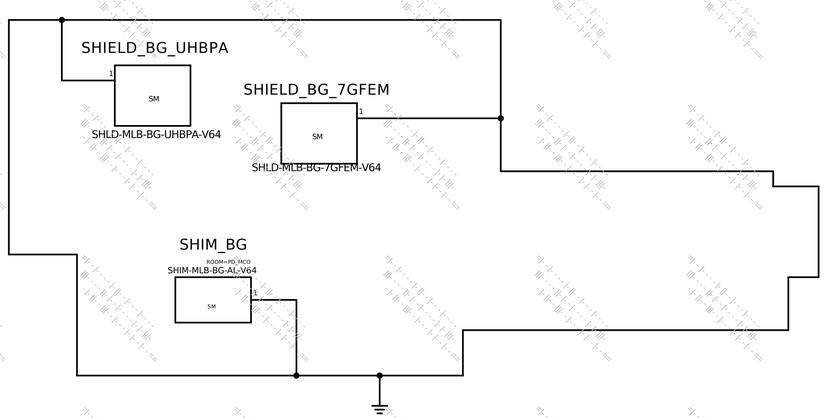

Bot

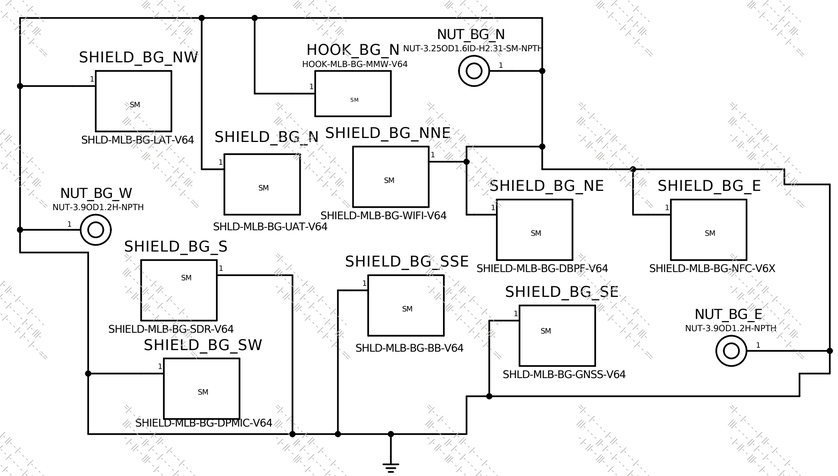

PAGE TITLE: SYSTEM: Conventions (9)

Apple Inc.

NOTICE OF PROPRIETARY PROPERTY:
THE INFORMATION CONTAINED HEREIN IS THE PROPRIETARY PROPERTY OF APPLE INC.
THE POSESSOR AGREES TO THE FOLLOWING:
I TO MAINTAIN THIS DOCUMENT IN CONFIDENCE
II NOT TO REPRODUCE OR COPY IT
III NOT TO REVEAL OR PUBLISH IT IN WHOLE OR PART
IV ALL RIGHTS RESERVED

DRAWING NUMBER	051-12836
SIZE	D
REVISION	4.0.0
BRANCH	proto-2
PAGE	9 OF 348
SHEET	4 OF 100

SUBSYSTEM SPECIFIC BOM TABLES

ALTERNATE PART NO.	PRIMARY PART NO.	REFERENCE DESIGNATORS	COMMENT
376S00527	376S00464	Q4400	NFET,120V,4.4A,0.070 OHM,DFN8
376S00581	376S00464	Q4400	NFET,120V,4.4A,0.070 OHM,DFN8
376S00680	376S00464	Q4400	NFET,110V,5.5A,0.070 OHM,DFN8
998-32873	338S00969	U4400	IC,SHAMISEN,A0,BLANKOTP,ISAC,CSP122

ALTERNATE PART NO.	PRIMARY PART NO.	REFERENCE DESIGNATORS	COMMENT
131S00167	131S00260	C4424	CAP,CER,C0G,2200PF,5%,25V,0402
131S00250	131S00260	C4424	CAP,CER,C0G,2200PF,5%,25V,0402
131S00824	131S00421	C4421,C4481	CAP,C0G,0.01UF,5%,35V,0402
131S00805	131S00421	C4421,C4481	CAP,C0G,0.01UF,5%,35V,0402
131S00855	131S00260	C4426,C4428	CAP,CER,C0G,2200PF,5%,25V,0402

NOTES:

1. Shamisen EN_EXT must be on sequenced PMU GPIO
2. Shamisen RESET is OD, requires external PU
3. EN_EXT must be on sequenced GPIO
4. Shamisen 1.2V inputs are tolerant to 1.8V signals

Shamisen

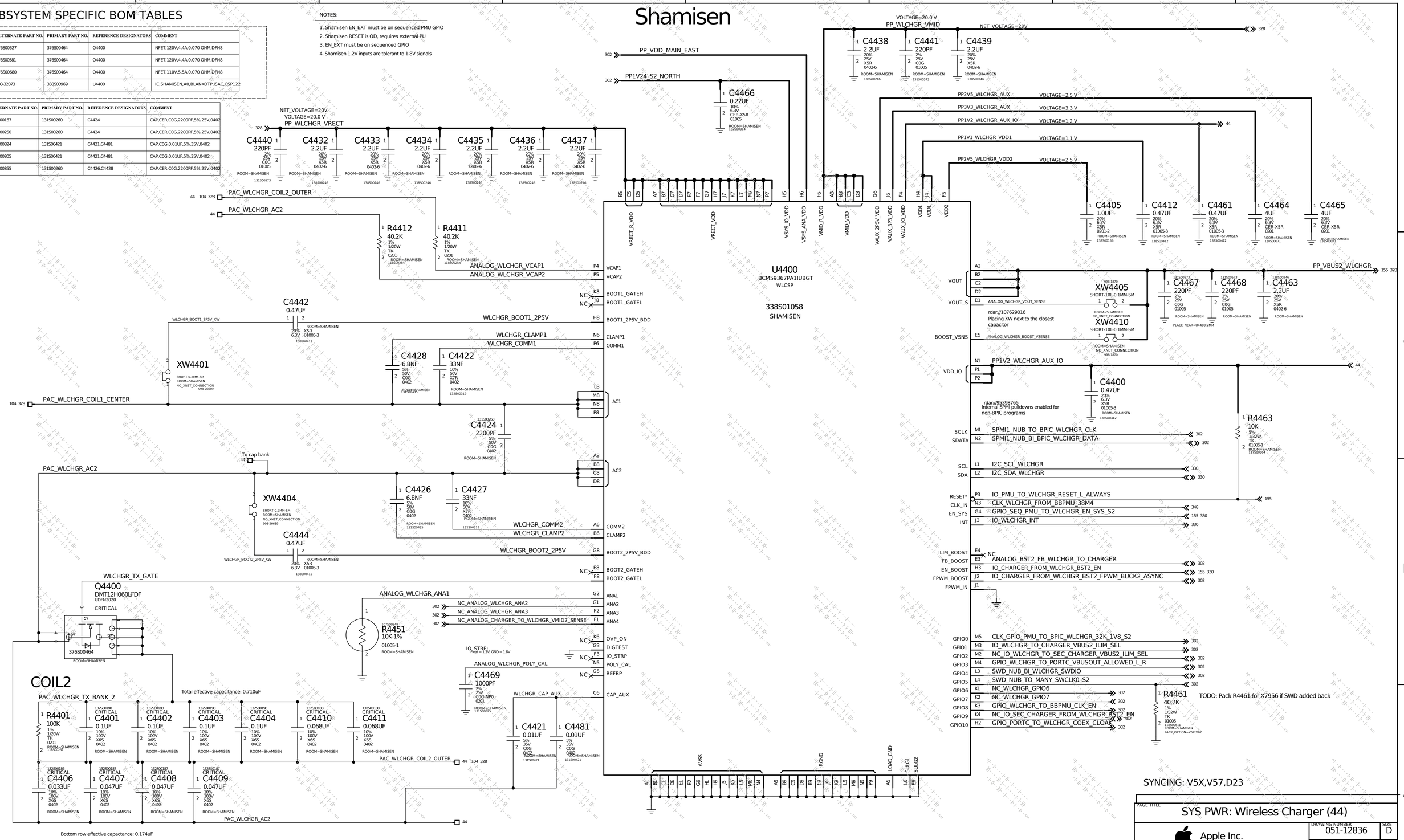

SYNCING: V5X,V57,D23

PAGE TITLE	SYS PWR: Wireless Charger (44)
Apple Inc.	DRAWING NUMBER 051-12836 SIZE D
	REVISION 4.0.0
	BRANCH proto-2
	PAGE 44 OF 348
	SHEET 5 OF 100

NOTICE OF PROPRIETARY PROPERTY:
THE INFORMATION CONTAINED HEREIN IS THE PROPRIETARY PROPERTY OF APPLE INC.
THE POSESSOR AGREES TO THE FOLLOWING:
I TO MAINTAIN THIS DOCUMENT IN CONFIDENCE
II NOT TO REPRODUCE OR COPY IT
III NOT TO REVEAL OR PUBLISH IT IN WHOLE OR PART
IV ALL RIGHTS RESERVED

ALTERNATE PART NO.	PRIMARY PART NO.	REFERENCE DESIGNATORS	COMMENT
107500469	107500349	ALL	TDK,THERMISTOR,NTC,10K OHM,1%,B=3380K,01005

Bot MLB NTCs

Place NTC XWs near interposer pins for _P nets
Routing can be single-ended

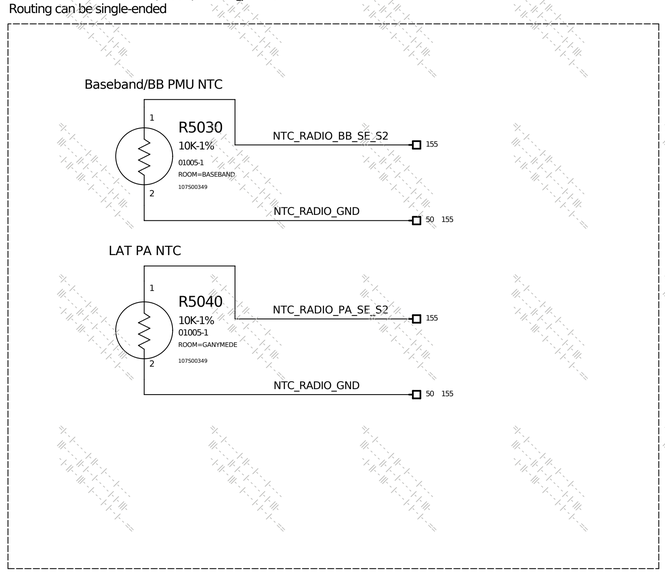

SYNCING: V5X

PAGE TITLE	SYS PWR: NTCs (Bottom) (50)
Apple Inc.	DRAWING NUMBER 051-12836 / SIZE D
	REVISION 4.0.0
	BRANCH proto-2
	PAGE 50 OF 348
	SHEET 6 OF 100

NOTICE OF PROPRIETARY PROPERTY:
THE INFORMATION CONTAINED HEREIN IS THE PROPRIETARY PROPERTY OF APPLE INC.
THE POSESSOR AGREES TO THE FOLLOWING:
I TO MAINTAIN THIS DOCUMENT IN CONFIDENCE
II NOT TO REPRODUCE OR COPY IT
III NOT TO REVEAL OR PUBLISH IT IN WHOLE OR PART
IV ALL RIGHTS RESERVED

AVEDON

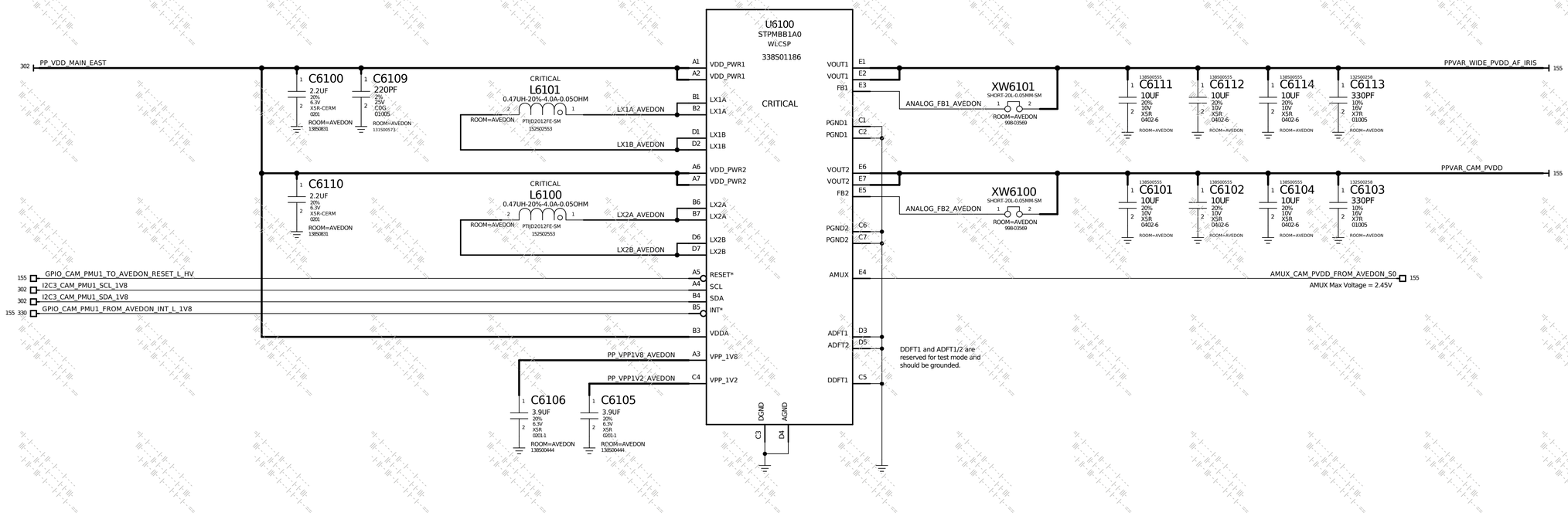

SYNCING:

PAGE TITLE	CAMERA: Actuator Supply (Avedon) (61)
	Apple Inc.
DRAWING NUMBER	051-12836
SIZE	D
REVISION	4.0.0
BRANCH	proto-2
PAGE	61 OF 348
SHEET	7 OF 100

NOTICE OF PROPRIETARY PROPERTY:

THE INFORMATION CONTAINED HEREIN IS THE PROPRIETARY PROPERTY OF APPLE INC.
THE POSESSOR AGREES TO THE FOLLOWING:
I TO MAINTAIN THIS DOCUMENT IN CONFIDENCE
II NOT TO REPRODUCE OR COPY IT
III NOT TO REVEAL OR PUBLISH IT IN WHOLE OR PART
IV ALL RIGHTS RESERVED

ALTERNATE PART NO.	PRIMARY PART NO.	REFERENCE DESIGNATORS	COMMENT
138S00501	138S00555	C6310,C6311,C6313,C6320,C6321,C6323	KYO,CAP,X5R,6UF,20%,16V,1.2UF@8V,K,HZL,0402

ALTERNATE PART NO.	PRIMARY PART NO.	REFERENCE DESIGNATORS	COMMENT
152S01563	152S02553	L6100,L6101,L6310	IND,MLD,0.47UH,20%,4A,50MO,2012H0.65
152S02566	152S01674	L6320	IND,MLD,0.47UH,20%,1.75A,175MOHM,0402
152S02184	152S02553	L6100,L6101,L6310	IND,MLD,0.47UH,15%,4.2A,42MO,H=0.65,2012
152S01524	152S01674	L6320	IND,MLD,0.47UH,20%,1.75A,175MOHM,0402

ALTERNATE PART NO.	PRIMARY PART NO.	REFERENCE DESIGNATORS	COMMENT
138S00647	138S00136	C6301,C6302,C6350,C1802_E,C1806_E,C1902_E,C1906_E,C2102_E,C7500_I,C7506_I,C7526	CAP,CER,X5R,2.2UF,20%,10V,0201

AUSTIN

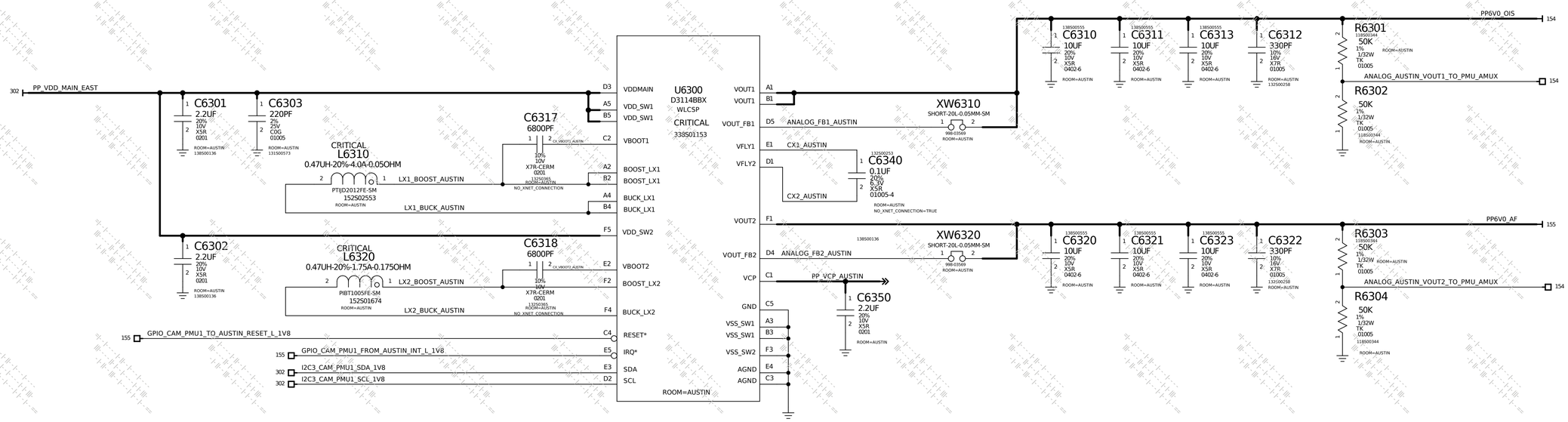

SYNCING: V5X

PAGE TITLE
CAMERA: OIS/AF (Austin) (63)

Apple Inc.

DRAWING NUMBER 051-12836
SIZE D
REVISION 4.0.0
BRANCH proto-2
PAGE 63 OF 348
SHEET 8 OF 100

NOTICE OF PROPRIETARY PROPERTY:

THE INFORMATION CONTAINED HEREIN IS THE PROPRIETARY PROPERTY OF APPLE INC.
THE POSESSOR AGREES TO THE FOLLOWING:
I TO MAINTAIN THIS DOCUMENT IN CONFIDENCE
II NOT TO REPRODUCE OR COPY IT
III NOT TO REVEAL OR PUBLISH IT IN WHOLE OR PART
IV ALL RIGHTS RESERVED

LED STROBE DRIVER (CASTLEPEAK)

ALTERNATE PART NO.	PRIMARY PART NO.	REFERENCE DESIGNATORS	COMMENT
152S02117	152S02049	L6520	IND,MLD,0.47UH,20%,1.7A,175MO,0402,TY,BT

ALTERNATE PART NO.	PRIMARY PART NO.	REFERENCE DESIGNATORS	COMMENT
152S01794	152S01255	ALL	TDK,IND,MLD,0.47UH,5.0A,38MO,2117
138S00388	138S00406	C6507	CAP,CER, X5R, 13uF, 20%, 6.3V, 0402
138S00405	138S00406	C6507	CAP,CER, X5R, 13uF, 20%, 6.3V, 0402
138S00440	138S00444	C6506	CAP,CER, X5R, 3.9uF, 20%, 6.3V, 0201
138S00439	138S00444	C6506	CAP,CER, X5R, 3.9uF, 20%, 6.3V, 0201

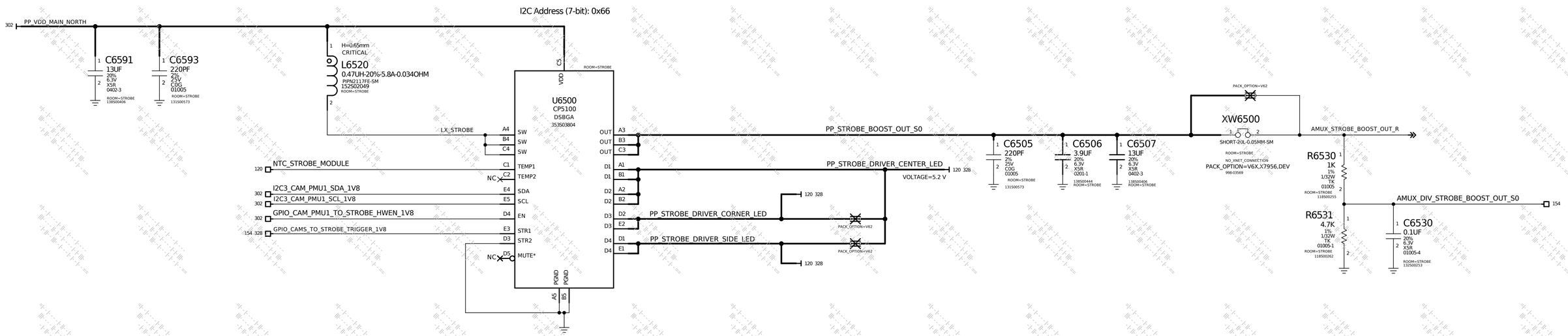

SYNCING: V5z, D23, DEV

PAGE TITLE	CAMERA: Strobe Driver (65)
Apple Inc.	DRAWING NUMBER 051-12836 SIZE D
	REVISION 4.0.0
	BRANCH proto-2
	PAGE 65 OF 348
	SHEET 9 OF 100

NOTICE OF PROPRIETARY PROPERTY:
THE INFORMATION CONTAINED HEREIN IS THE PROPRIETARY PROPERTY OF APPLE INC.
THE POSESSOR AGREES TO THE FOLLOWING:
I TO MAINTAIN THIS DOCUMENT IN CONFIDENCE
II NOT TO REPRODUCE OR COPY IT
III NOT TO REVEAL OR PUBLISH IT IN WHOLE OR PART
IV ALL RIGHTS RESERVED

IMU - ACCEL & GYRO

Mandalore

IMU

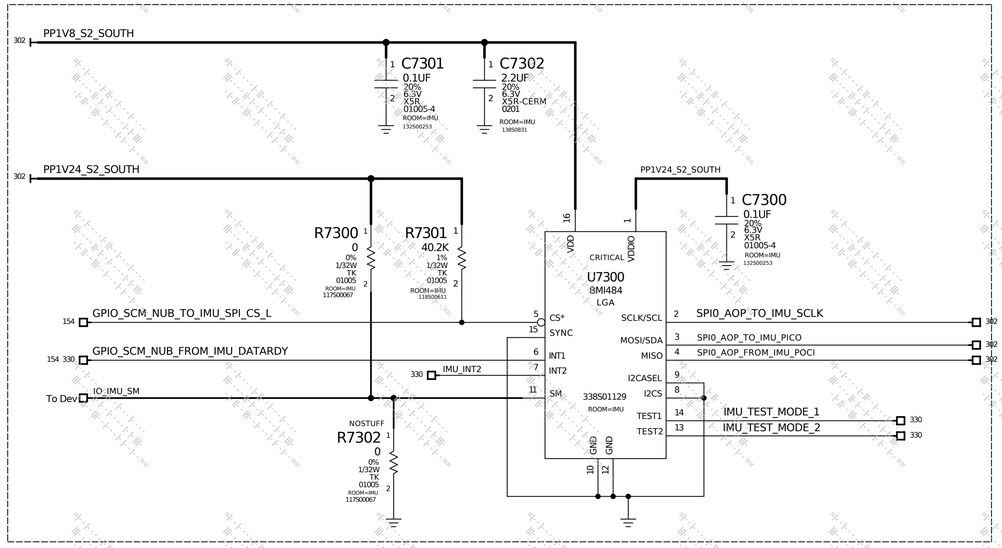

SYNCING: V5X,V57,D23

PAGE TITLE	SENSORS: Accel / Gyro (73)
Apple Inc.	DRAWING NUMBER 051-12836 SIZE D
	REVISION 4.0.0
	BRANCH proto-2
	PAGE 73 OF 348
	SHEET 10 OF 100

NOTICE OF PROPRIETARY PROPERTY:
THE INFORMATION CONTAINED HEREIN IS THE PROPRIETARY PROPERTY OF APPLE INC.
THE POSESSOR AGREES TO THE FOLLOWING:
I TO MAINTAIN THIS DOCUMENT IN CONFIDENCE
II NOT TO REPRODUCE OR COPY IT
III NOT TO REVEAL OR PUBLISH IT IN WHOLE OR PART
IV ALL RIGHTS RESERVED

ALTERNATE PART NO.	PRIMARY PART NO.	REFERENCE DESIGNATORS	COMMENT
138500512	138500540	C8021,C8040	Murata, CAP,X5R,4.5UF,20%,16V,1.2UF@8V,M,HZ,0402
138500511	138500540	C8021,C8040	KYO,CAP,X5R,6UF,20%,16V,1.2UF@8V,K,HZL,0402

BOT SPEAKER AMP

AVALON

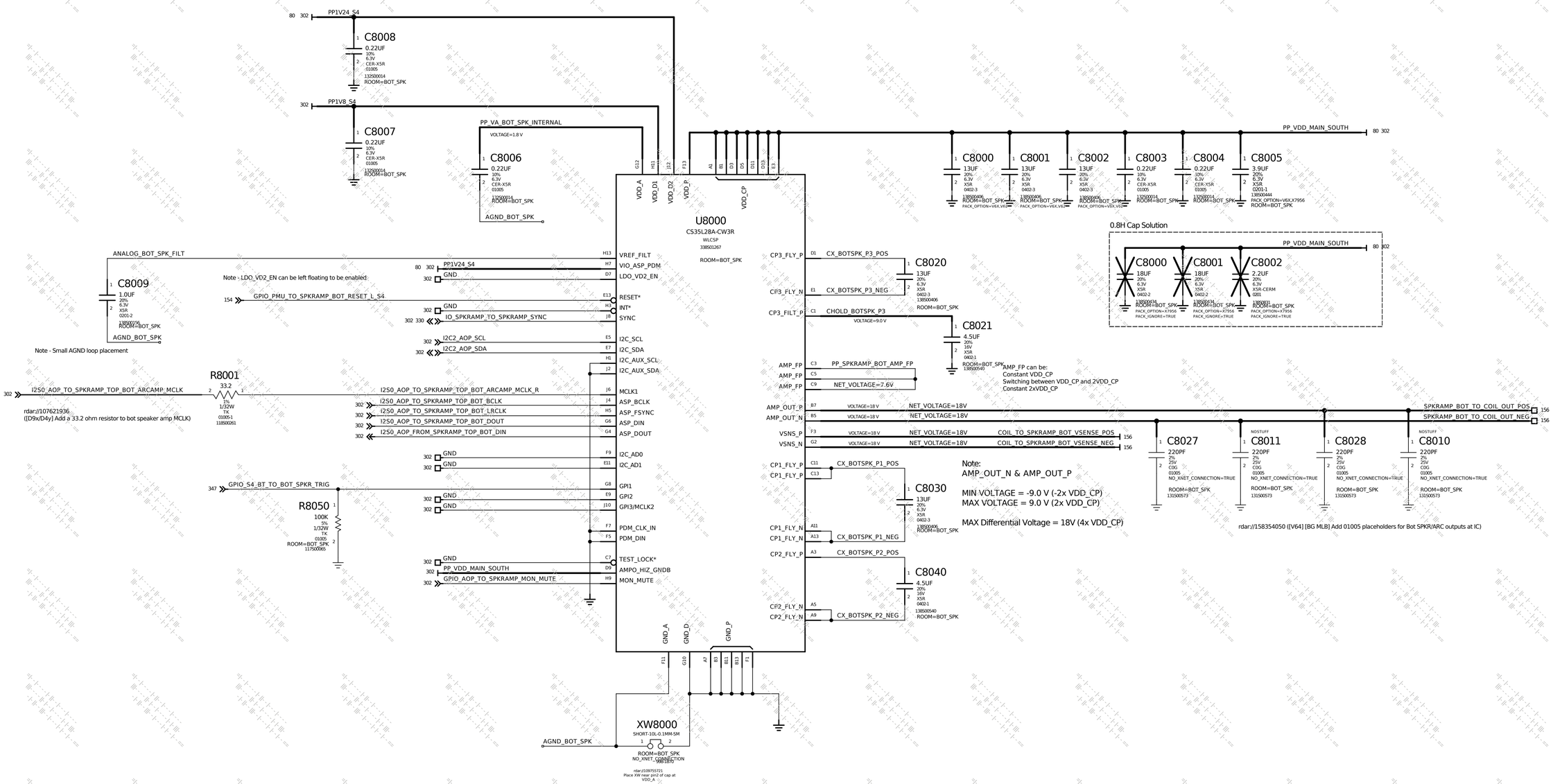

SYNCING: V5X,V57

PAGE TITLE
AUDIO: Bot Speaker Amp (80)

Apple Inc.

DRAWING NUMBER 051-12836 SIZE D

REVISION 4.0.0

BRANCH proto-2

PAGE 80 OF 348

SHEET 11 OF 100

NOTICE OF PROPRIETARY PROPERTY:
THE INFORMATION CONTAINED HEREIN IS THE PROPRIETARY PROPERTY OF APPLE INC.
THE POSESSOR AGREES TO THE FOLLOWING:
I TO MAINTAIN THIS DOCUMENT IN CONFIDENCE
II NOT TO REPRODUCE OR COPY IT
III NOT TO REVEAL OR PUBLISH IT IN WHOLE OR PART
IV ALL RIGHTS RESERVED

ALTERNATE PART NO.	PRIMARY PART NO.	REFERENCE DESIGNATORS	COMMENT
138500512	138500540	C8121,C8140	MURATA,CAP,X5R,6UF,20%,16V,1.2UF@8V,M,0402
138500511	138500540	C8121,C8140	KYO,CAP,X5R,6UF,20%,16V,1.2UF@8V,K,HZL,0402

TOP SPEAKER AMP

AVALON

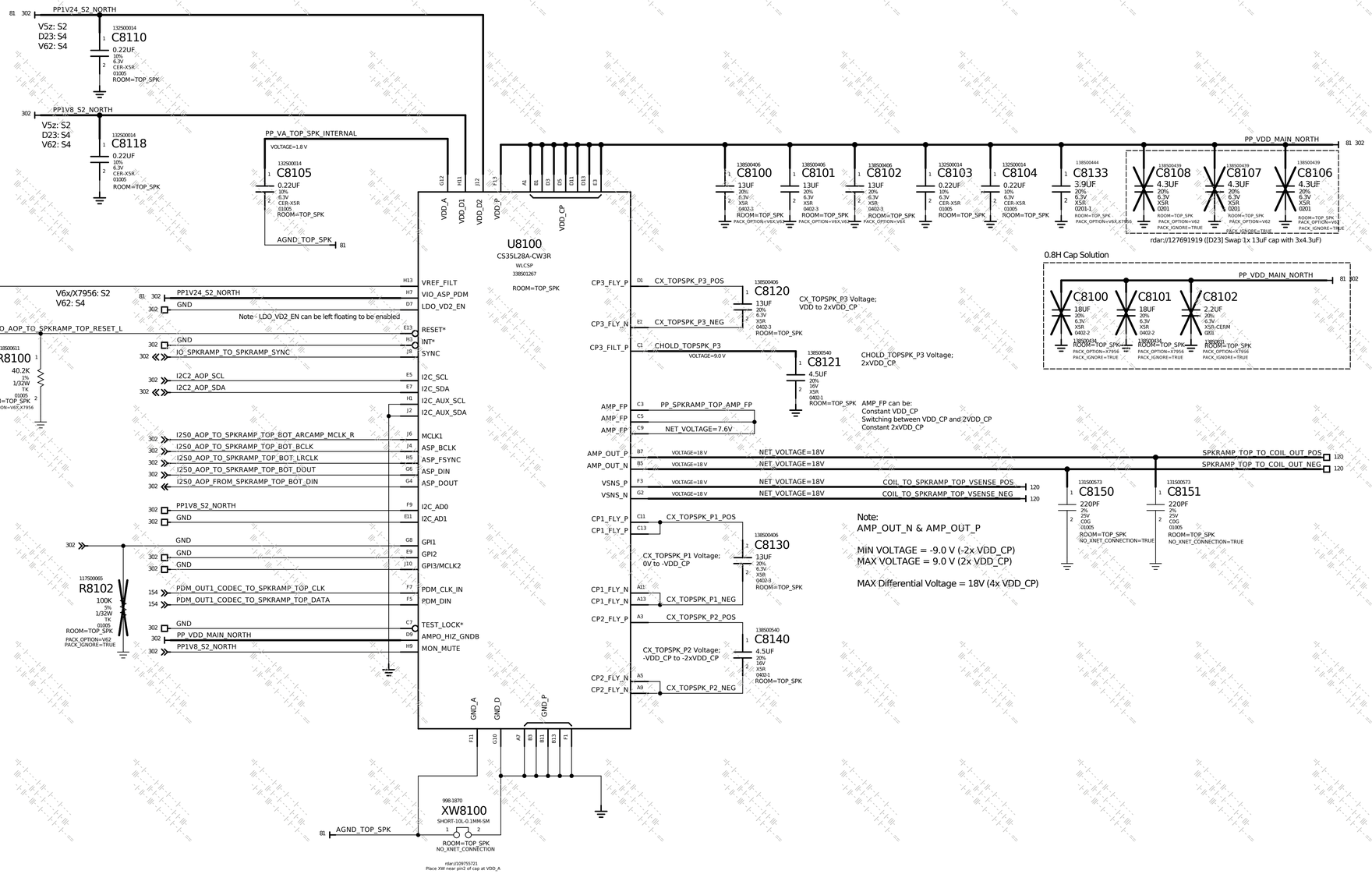

SYNCING: V5X,V57,D23

PAGE TITLE	AUDIO: Top Speaker Amp (81)
Apple Inc.	DRAWING NUMBER 051-12836 SIZE D
	REVISION 4.0.0
	BRANCH proto-2
	PAGE 81 OF 348
	SHEET 12 OF 100

NOTICE OF PROPRIETARY PROPERTY:
THE INFORMATION CONTAINED HEREIN IS THE PROPRIETARY PROPERTY OF APPLE INC.
THE POSESSOR AGREES TO THE FOLLOWING:
I TO MAINTAIN THIS DOCUMENT IN CONFIDENCE
II NOT TO REPRODUCE OR COPY IT
III NOT TO REVEAL OR PUBLISH IT IN WHOLE OR PART
IV ALL RIGHTS RESERVED

ALTERNATE PART NO.	PRIMARY PART NO.	REFERENCE DESIGNATORS	COMMENT
138500511	138500540	C8321,C8340	KYO,CAP,X5R,6UF,20%,16V,1.2UF@8V,K,HZL,0402

ARC SPEAKER AMP

AVALON

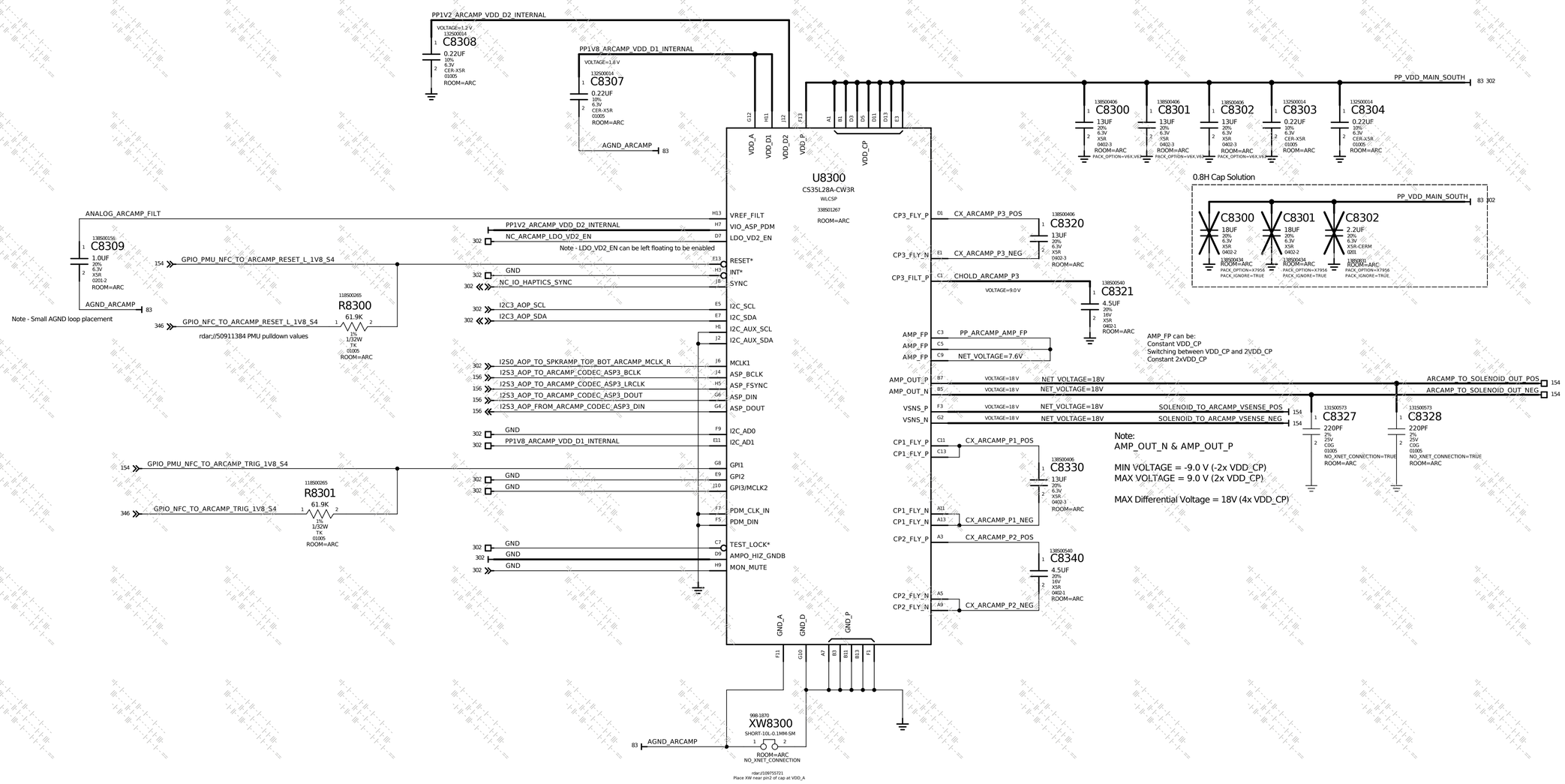

SYNCING: V5X,D23

PAGE TITLE	HAPTIC: Haptic Amp (83)
Apple Inc.	DRAWING NUMBER 051-12836 SIZE D
	REVISION 4.0.0
	BRANCH proto-2
	PAGE 83 OF 348
	SHEET 13 OF 100

NOTICE OF PROPRIETARY PROPERTY:
THE INFORMATION CONTAINED HEREIN IS THE PROPRIETARY PROPERTY OF APPLE INC.
THE POSESSOR AGREES TO THE FOLLOWING:
I TO MAINTAIN THIS DOCUMENT IN CONFIDENCE
II NOT TO REPRODUCE OR COPY IT
III NOT TO REVEAL OR PUBLISH IT IN WHOLE OR PART
IV ALL RIGHTS RESERVED

DISPLAY LDO (CIRO)

GLASSWING

ALTERNATE PART NO.	PRIMARY PART NO.	BOMOPTION	REFERENCE DESIGNATORS	COMMENT
353S04636	353S04618		U9101	IC,SGM2039AV,LDO REG,3.3V,1A,DFN8
685-00834	685-00833	BOARD_REV:PROTO2	SUBBOM_BUBO	IC,SGM2039AV,LDO REG,3.3V,1A,DFN8

PART NUMBER	BOMOPTION	REFERENCE DESIGNATORS	QTY	DESCRIPTION
117S00067	BUBO_ONSEMI	R9104	1	RES,TK,0 OHM,1/32W,01005
353S04634	BUBO_ONSEMI	U9100	1	IC,BUCK BOOST,LOW RIPPLE,1.2A,3.7V,WLP16
353S04658	BUBO_ADI	U9100	1	IC,BUCK BOOST,LOW NOISE,3.5W,3.7V,WLP16

ALTERNATE PART NO.	PRIMARY PART NO.	REFERENCE DESIGNATORS	COMMENT
152S02254	152S02193	L9100	IND,MLD,1.0UH,20%,3.1A,37MOHM,2016H0.8
152S02201	152S02193	L9100	IND,PWR,1.0UH,20%,2.7A,42MO,2016H0.8
152S01990	152S02193	L9100	IND,MLD,1.0UH,20%,3.6A,56MO,2016

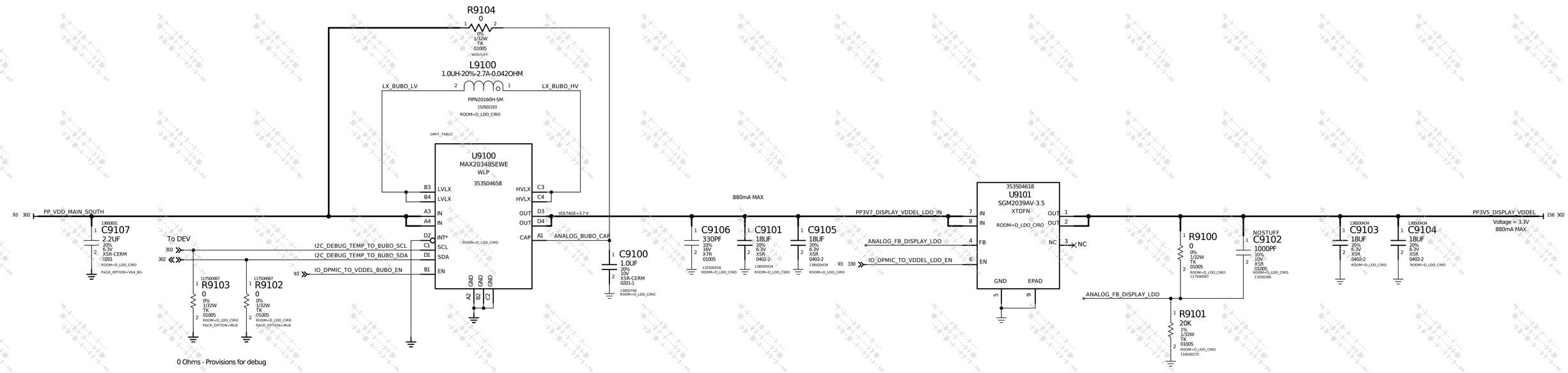

PAGE TITLE
TOP MODULE: Display BUBO/LDO (91)

Apple Inc.

DRAWING NUMBER 051-12836 SIZE D

REVISION 4.0.0

BRANCH proto-2

PAGE 91 OF 348

SHEET 14 OF 100

NOTICE OF PROPRIETARY PROPERTY:

THE INFORMATION CONTAINED HEREIN IS THE PROPRIETARY PROPERTY OF APPLE INC.
THE POSESSOR AGREES TO THE FOLLOWING:
I TO MAINTAIN THIS DOCUMENT IN CONFIDENCE
II NOT TO REPRODUCE OR COPY IT
III NOT TO REVEAL OR PUBLISH IT IN WHOLE OR PART
IV ALL RIGHTS RESERVED

ALTERNATE PART NO.	PRIMARY PART NO.	REFERENCE DESIGNATORS	COMMENT
152S00824	152S02303	L9200	TAIYO,1UH,20%,2A,69MO,H=0.65,2012
152S02185	152S02303	L9200	TDK,IND,PWR,1UH,20%,2.5A,84MO,H=0.65,2012

ALTERNATE PART NO.	PRIMARY PART NO.	REFERENCE DESIGNATORS	COMMENT
138S00535	138S00500	C9201,C9202	CAP,X5R,7.5UF,20%,10V,2.7UF@5V,HZ,0402
138S00554	138S00500	C9201,C9202	CAP,X5R,7.5UF,20%,10V,2.7UF@5V,HZ,0402

ELM

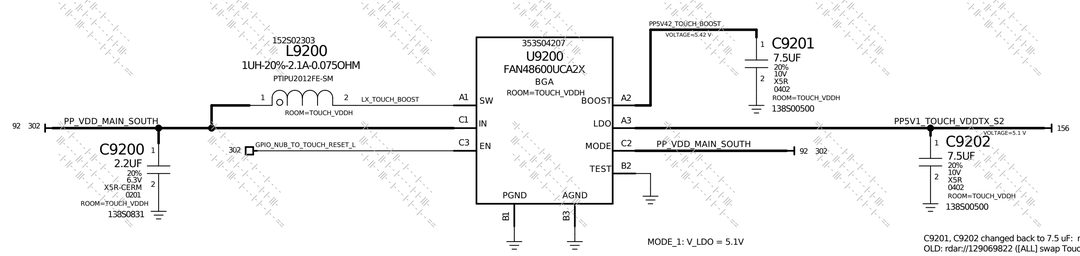

MODE_1: V_LDO = 5.1V

C9201, C9202 changed back to 7.5 uF: rdar://149875153 ([All] Touch Boost Cout C9201 and C9202 APN change to 138s00500/535/554)
OLD: rdar://129069822 ([ALL] swap Touch Boost and LDO output cap to be 138s00406)

SYNCING: V5X,V57,D23

PAGE TITLE	TOP MODULE: Touch Power (92)
Apple Inc.	DRAWING NUMBER 051-12836 SIZE D
	REVISION 4.0.0
	BRANCH proto-2
	PAGE 92 OF 348
	SHEET 15 OF 100

NOTICE OF PROPRIETARY PROPERTY:
THE INFORMATION CONTAINED HEREIN IS THE PROPRIETARY PROPERTY OF APPLE INC.
THE POSESSOR AGREES TO THE FOLLOWING:
I TO MAINTAIN THIS DOCUMENT IN CONFIDENCE
II NOT TO REPRODUCE OR COPY IT
III NOT TO REVEAL OR PUBLISH IT IN WHOLE OR PART
IV ALL RIGHTS RESERVED

DISPLAY PMIC

CIRO

ALTERNATE PART NO.	PRIMARY PART NO.	REFERENCE DESIGNATORS	COMMENT
152S02210	152S02192	L9300	CAP,X5R,4.7UF,20%,25V,0402,H0.8,INTPOSER
152S02251	152S02192	L9300	CAP,X5R,4.7UF,20%,25V,0402,H0.8,INTPOSER
152S02196	152S02192	L9300	CAP,X5R,4.7UF,20%,25V,0402,H0.8,INTPOSER
152S01424	152S01406	L9303	CAP,X5R,4.7UF,20%,25V,0402,H0.8,INTPOSER
152S02565	152S01406	L9303	CAP,X5R,4.7UF,20%,25V,0402,H0.8,INTPOSER

ALTERNATE PART NO.	PRIMARY PART NO.	REFERENCE DESIGNATORS	COMMENT
138S00497	138S00240	C9303,C9308	CAP,CER,X5R,3UF,20%,25V,HZ,0.8@12.5,0402
138S00524	138S00240	C9303,C9308	CAP,X5R,4UF,20%,25V,0.8@12.5,S,HZ,0402
138S00526	138S00240	C9303,C9308	CAP,X5R,4.7UF,20%,25V,0402,H0.8,INTPOSER
138S00506	138S00240	C9303,C9308	CAP,X5R,4.7UF,20%,25V,0402,H0.8,INTPOSER
138S00525	138S00240	C9303,C9308	CAP,X5R,4.7UF,20%,25V,0402,H0.8,INTPOSER
138S00528	138S00240	C9303,C9308	CAP,X5R,4.7UF,20%,25V,0402,H0.8,INTPOSER
138S00638	138S00240	C9303,C9308	CAP,X5R,4.7UF,20%,25V,0402,H0.8,INTPOSER
138S00529	138S00240	C9303,C9308	CAP,X5R,4.7UF,20%,25V,0402,H0.8,INTPOSER

ALTERNATE PART NO.	PRIMARY PART NO.	REFERENCE DESIGNATORS	COMMENT
152S02208	152S02194	L9304	CAP,X5R,4.7UF,20%,25V,0402,H0.8,INTPOSER
152S02197	152S02194	L9304	CAP,X5R,4.7UF,20%,25V,0402,H0.8,INTPOSER
152S02195	152S02191	L9301,L9302	CAP,X5R,4.7UF,20%,25V,0402,H0.8,INTPOSER
152S02252	152S02191	L9301,L9302	CAP,X5R,4.7UF,20%,25V,0402,H0.8,INTPOSER
152S02253	152S02194	L9304	CAP,X5R,4.7UF,20%,25V,0402,H0.8,INTPOSER
152S02373	152S02191	L9301,L9302	CAP,X5R,4.7UF,20%,25V,0402,H0.8,INTPOSER

INDUCTOR ALTERNATES

ALTERNATE PART NO.	PRIMARY PART NO.	COMMENT
152S01585	152S01564	TAIYO,2.2UH-20%-2.8A-0.104OHM
152S01290	152S01237	TAIYO,2.2UH-20%-3.7A-0.07OHM
152S02196	152S01564	MG,2.2UH,20%,2.7A,86MO
152S02192	152S01564	CYNTEC,2.2UH,20%,2.7A,95MO
152S02195	152S01237	MG,2.2UH,20%,3.8A,70MO
152S02191	152S01237	CYNTEC,2.2UH,20%,3.8A,70MO
152S02197	152S01240	CYNTEC,4.7UH,20%,1.7A,205MOHM
152S01731	152S01240	TAIYO,4.7UH,20%,1.9A,205MO
152S02194	152S01240	MG,4.7UH,20%,1.7A,200MOHM

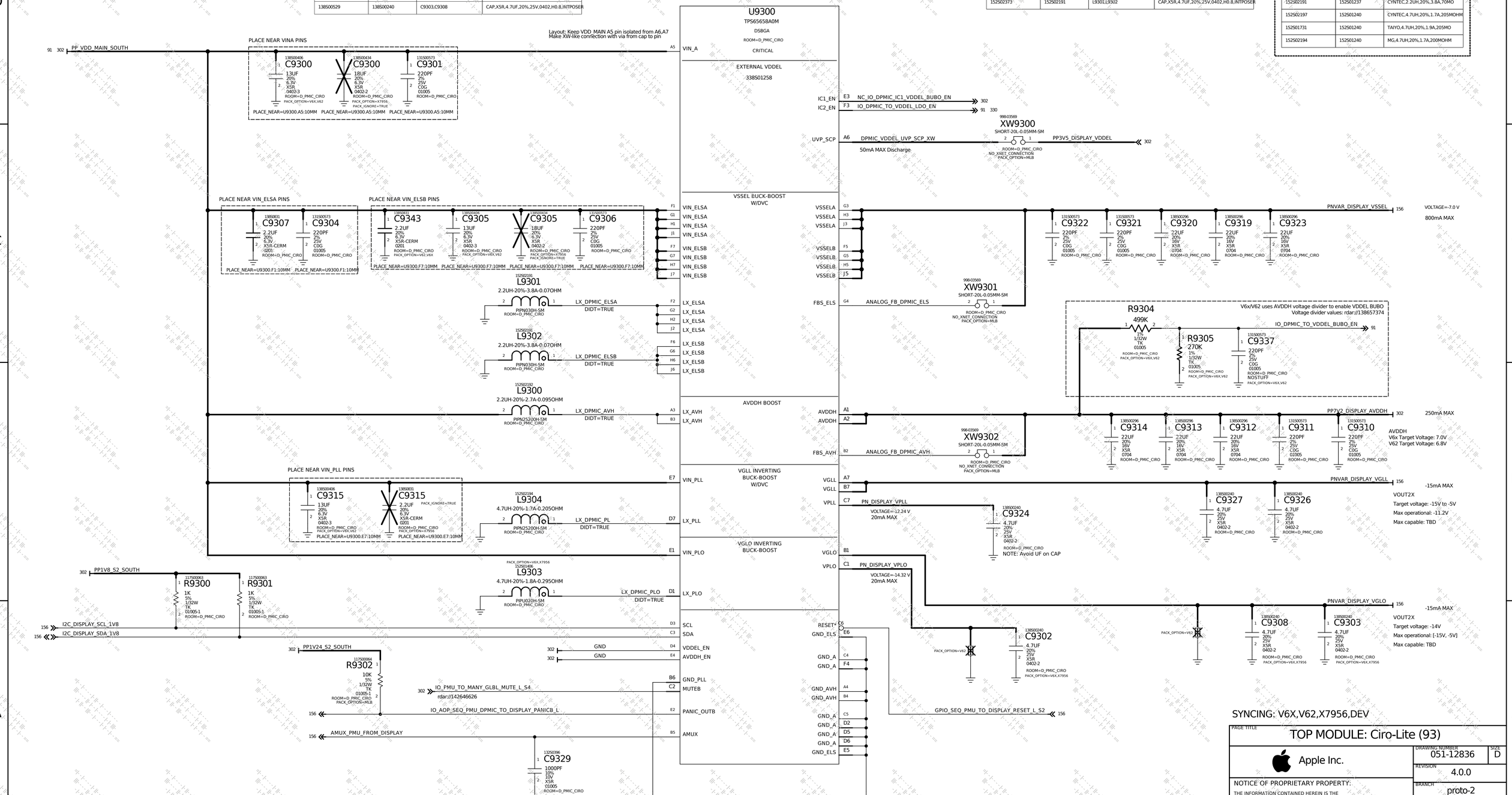

SYNCING: V6X,V62,X7956,DEV

PAGE TITLE: TOP MODULE: Ciro-Lite (93)

Apple Inc.

DRAWING NUMBER: 051-12836 SIZE: D

REVISION: 4.0.0

BRANCH: proto-2

PAGE: 93 OF 348

SHEET: 16 OF 100

NOTICE OF PROPRIETARY PROPERTY:

THE INFORMATION CONTAINED HEREIN IS THE PROPRIETARY PROPERTY OF APPLE INC. THE POSESSOR AGREES TO THE FOLLOWING:

I TO MAINTAIN THIS DOCUMENT IN CONFIDENCE
II NOT TO REPRODUCE OR COPY IT
III NOT TO REVEAL OR PUBLISH IT IN WHOLE OR PART
IV ALL RIGHTS RESERVED

Ironman B2B

CONNECTOR

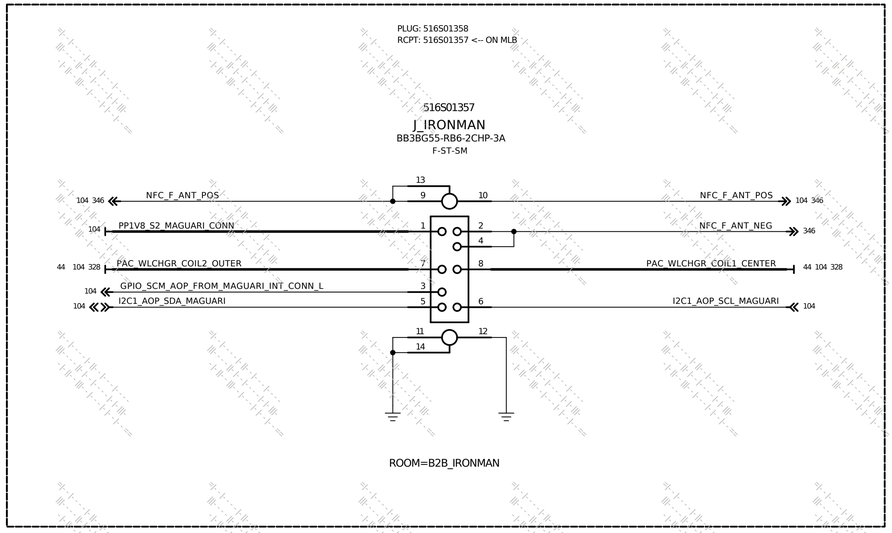

WLCHGR FILTERS

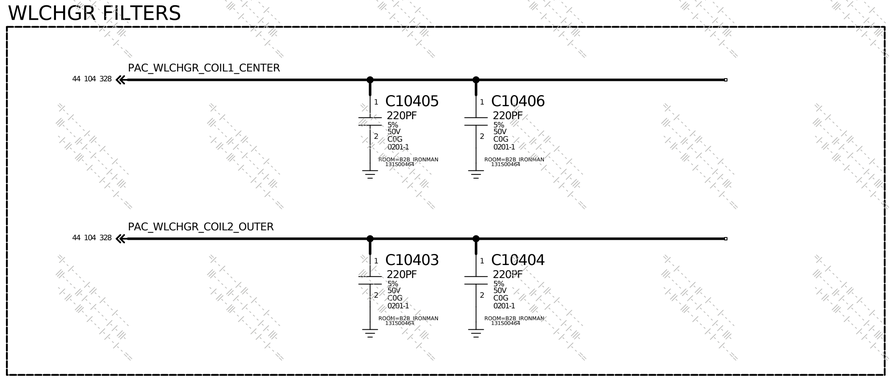

FILTERS

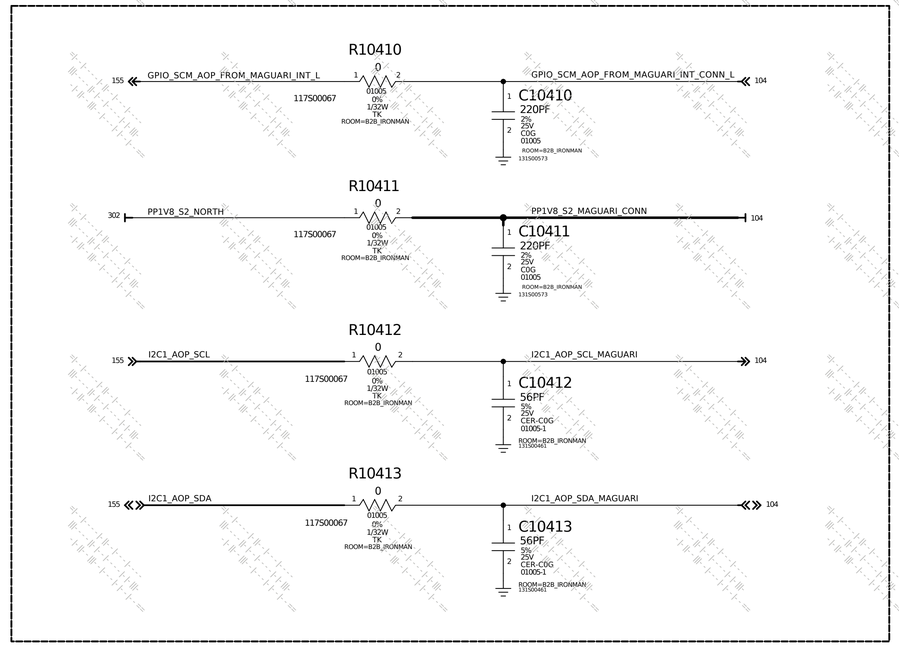

SYNCING: V5X

PAGE TITLE	B2B: Ironman (104)
Apple Inc.	DRAWING NUMBER 051-12836 SIZE D
	REVISION 4.0.0
	BRANCH proto-2
	PAGE 104 OF 348
	SHEET 17 OF 100

NOTICE OF PROPRIETARY PROPERTY:
THE INFORMATION CONTAINED HEREIN IS THE PROPRIETARY PROPERTY OF APPLE INC.
THE POSESSOR AGREES TO THE FOLLOWING:
I TO MAINTAIN THIS DOCUMENT IN CONFIDENCE
II NOT TO REPRODUCE OR COPY IT
III NOT TO REVEAL OR PUBLISH IT IN WHOLE OR PART
IV ALL RIGHTS RESERVED

UAT1 & UAT2 HOTBAR

HOTBAR PADS

APN: 998-38407

J_UATBRIDGE
UAT-BRIDGE-MLB-V64
HB-SM
SYM 1 OF 17

Pin	Net	Page
A1		
A2	PP_CODEC_TO_MIC2_REAR_BIAS_CONN	120
A3	ANALOG_FLICKER_DET_VIS_TO_CODEC_AIN6_CONN_P	121
A4	I2C4_AOP_SCL_FLICKER_DET_CONN	121
A5	PP_STROBE_DRIVER_CORNER_LED	65 120 328

J_UATBRIDGE
UAT-BRIDGE-MLB-V64
HB-SM
SYM 10 OF 17

Pin	Net	Page
J1		
J2	50_TRX_LB_ANT2	348
J3		
J4	50_RX_GNSS_L5_ANT10	348
J5		

J_UATBRIDGE
UAT-BRIDGE-MLB-V64
HB-SM
SYM 2 OF 17

Pin	Net	Page
B1		
B2	RET_CODEC_FROM_MIC2_REAR_CONN	120
B3	ANALOG_FLICKER_DET_VIS_IR_TO_CODEC_AIN5_AIN6_CONN_N	121
B4	I2C4_AOP_SDA_FLICKER_DET_CONN	121
B5	PP_STROBE_DRIVER_SIDE_LED	65 120 328

J_UATBRIDGE
UAT-BRIDGE-MLB-V64
HB-SM
SYM 11 OF 17

Pin	Net
K1	
K2	
K3	
K4	
K5	

J_UATBRIDGE
UAT-BRIDGE-MLB-V64
HB-SM
SYM 3 OF 17

Pin	Net	Page
C1		
C2	ANALOG_MIC2_REAR_TO_CODEC_AIN2_CONN_P	120
C3	ANALOG_FLICKER_DET_IR_TO_CODEC_AIN5_CONN_P	121
C4	PP3V0_FLICKER_DET_FROM_CODEC_CONN	121
C5	PP_STROBE_DRIVER_CENTER_LED	65 120 328

J_UATBRIDGE
UAT-BRIDGE-MLB-V64
HB-SM
SYM 12 OF 17

Pin	Net	Page
L1		
L2	50_TRX_UHB_ANT8	348
L3		
L4	50_TRX_WLAN7G_UWBCH5_NB_CH9_TOF_ANT6	347
L5		

J_UATBRIDGE
UAT-BRIDGE-MLB-V64
HB-SM
SYM 4 OF 17

Pin	Net	Page
D1		
D2	ANALOG_MIC2_REAR_TO_CODEC_AIN2_CONN_N	120
D3	NTC_STROBE_MODULE_CONN	120
D4	COIL_TO_SPKRAMP_TOP_VSENSE_NEG_CONN	120
D5	PP_STROBE_DRIVER_CENTER_LED	65 120 328

J_UATBRIDGE
UAT-BRIDGE-MLB-V64
HB-SM
SYM 13 OF 17

Pin
M1
M2
M3
M4
M5

J_UATBRIDGE
UAT-BRIDGE-MLB-V64
HB-SM
SYM 5 OF 17

Pin	Net	Page
E1		
E2		
E3		
E4	COIL_TO_SPKRAMP_TOP_VSENSE_POS_CONN	120
E5	SPKRAMP_TOP_TO_COIL_OUT_NEG	81 120

J_UATBRIDGE
UAT-BRIDGE-MLB-V64
HB-SM
SYM 14 OF 17

Pin	Net	Page
N1		
N2	50_TRX_MB_HB_UHB_WLAN24_ANT4	348
N3		
N4		
N5	SAWTOOTH_UAT_B_CONN	120

J_UATBRIDGE
UAT-BRIDGE-MLB-V64
HB-SM
SYM 6 OF 17

Pin	Net	Page
F1		
F2	SAWTOOTH_UAT_A_CONN	120
F3		
F4		
F5	SPKRAMP_TOP_TO_COIL_OUT_POS	81 120

J_UATBRIDGE
UAT-BRIDGE-MLB-V64
HB-SM
SYM 15 OF 17

Pin
O1
O2
O3
O4
O5

J_UATBRIDGE
UAT-BRIDGE-MLB-V64
HB-SM
SYM 7 OF 17

Pin	Net	Page
G1		
G2	NTC_STOCKHOLM	121 346
G3		
G4	NFC_P_ANT_POS	120 346
G5		

J_UATBRIDGE
UAT-BRIDGE-MLB-V64
HB-SM
SYM 16 OF 17

Pin	Net	Page
P1		
P2	50_TRX_WLAN7G_NB_ANT16	347
P3		
P4	50_TRX_UWBCH9_ANT12	333
P5		

J_UATBRIDGE
UAT-BRIDGE-MLB-V64
HB-SM
SYM 8 OF 17

Pin	Net	Page
H1		
H2		
H3		
H4	NFC_P_ANT_POS	120 346
H5		

J_UATBRIDGE
UAT-BRIDGE-MLB-V64
HB-SM
SYM 17 OF 17

Pin
Q1
Q2
Q3
Q4
Q5

J_UATBRIDGE
UAT-BRIDGE-MLB-V64
HB-SM
SYM 9 OF 17

Pin
I1
I2
I3
I4
I5

SUBUS FILTERS

348 SAWTOOTH_UAT_A — R12000 0 0% 1/32W TK 01005 ROOM=B2B_UAT 117500067 — C12000 33PF 5% 16V CER-NP0-C0G 01005-1 ROOM=B2B_UAT 131500742 — SAWTOOTH_UAT_A_CONN 120

156 348 SAWTOOTH_UAT_B — R12007 0 0% 1/32W TK 01005 ROOM=B2B_UAT 117500067 — C12009 33PF 5% 16V CER-NP0-C0G 01005-1 ROOM=B2B_UAT 131500742 — SAWTOOTH_UAT_B_CONN 120

TOP SPEAKER

rdar://155881786 ([V64][BG] Tracking radar for removing C12020/C12023 on V64 BG)

81 120 SPKRAMP_TOP_TO_COIL_OUT_POS 81 120

81 COIL_TO_SPKRAMP_TOP_VSENSE_POS — C12022 220PF 2% 25V C0G 01005 ROOM=B2B_UAT1 131500573 — R12021 100 5% 1/32W TK 01005-1 ROOM=B2B_UAT1 117500069 — COIL_TO_SPKRAMP_TOP_VSENSE_POS_CONN 120

81 120 SPKRAMP_TOP_TO_COIL_OUT_NEG 81 120

81 COIL_TO_SPKRAMP_TOP_VSENSE_NEG — C12025 220PF 2% 25V C0G 01005 ROOM=B2B_UAT1 131500573 — R12024 100 5% 1/32W TK 01005-1 ROOM=B2B_UAT1 117500069 — COIL_TO_SPKRAMP_TOP_VSENSE_NEG_CONN 120

MIC2

154 RET_CODEC_FROM_MIC2_REAR — R12001 0 117500067 0% 1/32W TK 01005 ROOM=B2B_UAT — C12001 56PF 5% 25V CER-C0G 01005-1 ROOM=B2B_UAT 131500461 — RET_CODEC_FROM_MIC2_REAR_CONN 120

154 PP_CODEC_TO_MIC2_REAR_BIAS — R12002 0 117500067 0% 1/32W TK 01005 ROOM=B2B_UAT — C12002 220PF 2% 25V C0G 01005 ROOM=B2B_UAT 131500573 — PP_CODEC_TO_MIC2_REAR_BIAS_CONN 120

154 ANALOG_MIC2_REAR_TO_CODEC_AIN2_P — R12003 0 117500067 0% 1/32W TK 01005 ROOM=B2B_UAT — C12003 56PF 5% 25V CER-C0G 01005-1 ROOM=B2B_UAT 131500461 — ANALOG_MIC2_REAR_TO_CODEC_AIN2_CONN_P 120

154 ANALOG_MIC2_REAR_TO_CODEC_AIN2_N — R12004 0 117500067 0% 1/32W TK 01005 ROOM=B2B_UAT — C12004 56PF 5% 25V CER-C0G 01005-1 ROOM=B2B_UAT 131500461 — ANALOG_MIC2_REAR_TO_CODEC_AIN2_CONN_N 120

STROBE

65 NTC_STROBE_MODULE — R12005 0 117500067 0% 1/32W TK 01005 ROOM=B2B_UAT — NTC_STROBE_MODULE_CONN 120

R12006 19.1K 1% 1/32W TK 01005 ROOM=B2B_UAT 118500248 — C12005 220PF 2% 25V C0G 01005 ROOM=B2B_UAT 131500573

VOLTAGE=5.2 V
65 120 328 PP_STROBE_DRIVER_CENTER_LED — C12006 220PF 2% 25V C0G 01005 ROOM=B2B_UAT 131500573

VOLTAGE=5.2 V
65 120 328 PP_STROBE_DRIVER_CORNER_LED — C12007 220PF 2% 25V C0G 01005 ROOM=B2B_UAT 131500573

VOLTAGE=5.2 V
65 120 328 PP_STROBE_DRIVER_SIDE_LED — C12008 220PF 2% 25V C0G 01005 ROOM=B2B_UAT 131500573

SYNCING: V5X

PAGE TITLE	B2B: UAT1/UAT2 (1/2) (120)
Apple Inc.	DRAWING NUMBER 051-12836 — SIZE D
	REVISION 4.0.0
	BRANCH proto-2
	PAGE 120 OF 348
	SHEET 18 OF 100

NOTICE OF PROPRIETARY PROPERTY:
THE INFORMATION CONTAINED HEREIN IS THE PROPRIETARY PROPERTY OF APPLE INC.
THE POSESSOR AGREES TO THE FOLLOWING:
I TO MAINTAIN THIS DOCUMENT IN CONFIDENCE
II NOT TO REPRODUCE OR COPY IT
III NOT TO REVEAL OR PUBLISH IT IN WHOLE OR PART
IV ALL RIGHTS RESERVED

UAT1/UAT2 HOTBAR

ALTERNATE PART NO.	PRIMARY PART NO.	REFERENCE DESIGNATORS	COMMENT
131S00991	131S00461	C10412,C10413,C12001,C12003,C12004,C12120,C12121,C12128,C12129	CAP,CER,NP0/C0G,56PF,5%,25V,TY,01005
131S00776	131S00461	C10412,C10413,C12001,C12003,C12004,C12120,C12121,C12128,C12129	CAP,CER,NP0/C0G,56PF,5%,25V,TY,01005

FLICKER DET

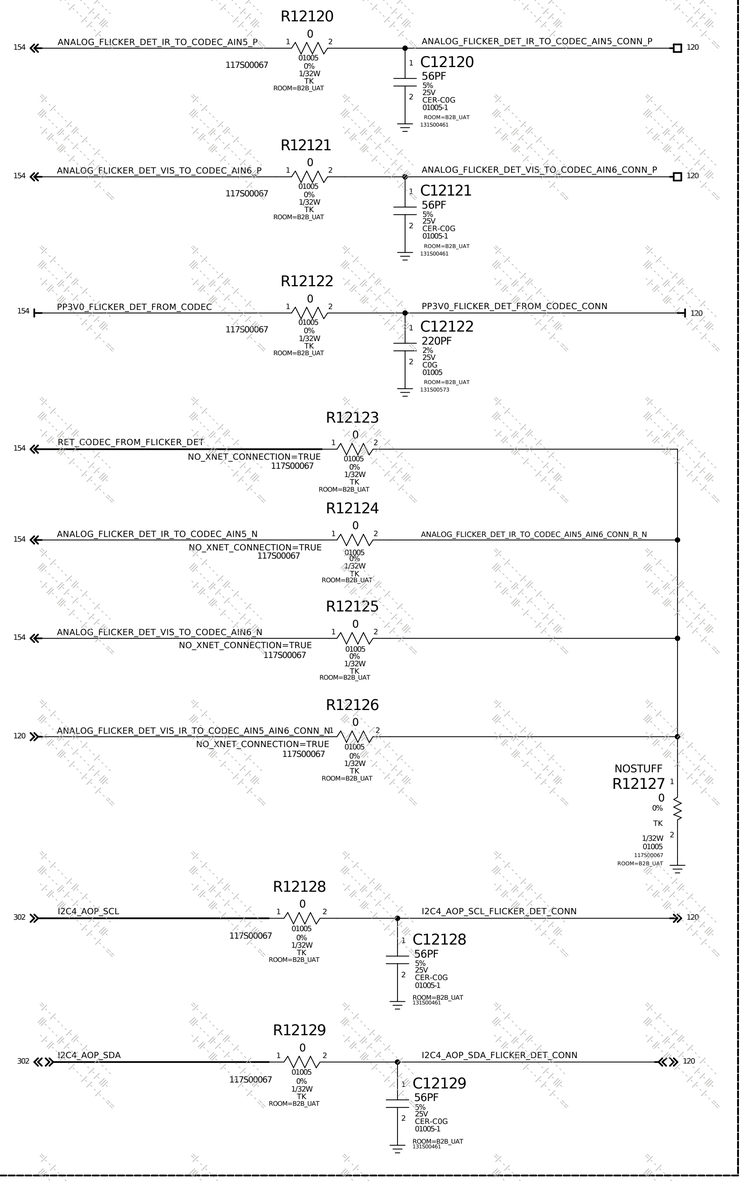

NTC

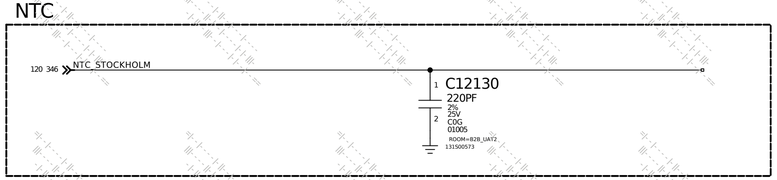

SYNCING: V5X

PAGE TITLE	B2B: UAT1/UAT2 (2/2) (121)
Apple Inc.	DRAWING NUMBER 051-12836 SIZE D
	REVISION 4.0.0
	BRANCH proto-2
	PAGE 121 OF 348
	SHEET 19 OF 100

NOTICE OF PROPRIETARY PROPERTY:
THE INFORMATION CONTAINED HEREIN IS THE PROPRIETARY PROPERTY OF APPLE INC.
THE POSESSOR AGREES TO THE FOLLOWING:
I TO MAINTAIN THIS DOCUMENT IN CONFIDENCE
II NOT TO REPRODUCE OR COPY IT
III NOT TO REVEAL OR PUBLISH IT IN WHOLE OR PART
IV ALL RIGHTS RESERVED

GENERAL ALIASES

SYNCING:V5X

PAGE TITLE
SYSTEM: General Aliases (146)

Apple Inc.

DRAWING NUMBER 051-12836
SIZE D
REVISION 4.0.0
BRANCH proto-2
PAGE 146 OF 348
SHEET 20 OF 100

NOTICE OF PROPRIETARY PROPERTY:
THE INFORMATION CONTAINED HEREIN IS THE PROPRIETARY PROPERTY OF APPLE INC.
THE POSESSOR AGREES TO THE FOLLOWING:
I TO MAINTAIN THIS DOCUMENT IN CONFIDENCE
II NOT TO REPRODUCE OR COPY IT
III NOT TO REVEAL OR PUBLISH IT IN WHOLE OR PART
IV ALL RIGHTS RESERVED

INTERPOSER: BG (1/2)

998-38440
J_INT_TOP
INTERPOSER-MLB-TOP-GOLDFISH-V6X
SMT-PAD
SYM 1 OF 4

154	GND	1
154	GND	2
154	GND	3
154	GND	4
154	SOLENOID_TO_ARCAMP_VSENSE_NEG	5
154	ARCAMP_TO_SOLENOID_OUT_NEG	6
154	SOLENOID_TO_ARCAMP_VSENSE_POS	7
154	ARCAMP_TO_SOLENOID_OUT_POS	8
154	GND	9
154	GND	10
154	50_TRX_LB_LMB_MB_HB_WLAN24_ANT3	11
154	GND	12
154	GND	13
154	50_TRX_MB_HB_ANT1	14
154	GND	15
154	GND	16
154	50_TRX_UHB_ANT7	17
154	GND	18
154	GND	19
154	50_TRX_UHB_ANT9	20
154	GND	21
154	GND	22
154	50_TRX_LMB_MB_HB_L1_ANT14	23
154	GND	24
154	GND	25
154	GND	26
154	GND	27
154	SAWTOOTH_LAT_B	28
154	GND	29
154	SAWTOOTH_LAT_A	30
154	GND	31
154	SAWTOOTH_UAT_C	32
154	GND	33
154	SPI0_AOP_TO_IMU_SCLK	34
154	GPIO_SCM_NUB_FROM_IMU_DATARDY	35
154	SPI0_AOP_FROM_IMU_POCI	36
154	GPIO_SCM_NUB_TO_IMU_SPI_CS_L	37
154	SPI0_AOP_TO_IMU_PICO	38
154	GND	39
154	GND	40
154	PDM_OUT1_CODEC_TO_SPKRAMP_TOP_CLK	41
154	PDM_OUT1_CODEC_TO_SPKRAMP_TOP_DATA	42
154	GPIO_AOP_TO_SPKRAMP_MON_MUTE	43
154	GPIO_AOP_TO_SPKRAMP_TOP_RESET_L	44
154	GND	45
154	GND	46
154	GND	47
154	GND	48
154	GND	49
154	GND	50
154	GND	51
154	GPIO_CAMS_TO_STROBE_TRIGGER_1V8	52
154	GND	53
154	GND	54
154	GND	55
154	GND	56
154	GND	57
154	GND	58
154	GND	59
154	GND	60
154	GND	61
154	GND	62
154	GND	63
154	GND	64
154	GND	65
154	PP_VDD_MAIN_NORTH	66
154	GND	67
154	PP_VDD_MAIN_NORTH	68
154	GND	69
154	PP_VDD_MAIN_NORTH	70
154	GND	71
154	PP_VDD_MAIN_NORTH	72
154	GND	73
154	PP_VDD_BOOST	74
154	GPIO_CAM_PMU1_TO_STROBE_HWEN_1V8	75
154	GPIO_PMU_TO_SPKRAMP_BOT_RESET_L_S4	76
154	I2C2_AOP_SCL	77
154	I2C2_AOP_SDA	78
154	GND	79
154	PP1V8_S2_NORTH	80
154	GND	81
154	GND	82
154	GPIO_AP_FROM_NFC_P_BOOT_STOP	83
154	PP1V24_S2_NORTH	84
154	GND	85
154	GND	86
154	RET_CODEC_FROM_MIC2_REAR	87
154	ANALOG_MIC2_REAR_TO_CODEC_AIN2_N	88
154	PP_CODEC_TO_MIC2_REAR_BIAS	89
154	ANALOG_MIC2_REAR_TO_CODEC_AIN2_P	90

91	GND	154
92	GND	154
93	GND	154
94	GPIO_PMU_NFC_TO_ARCAMP_RESET_L_1V8_S4	154
95	GPIO_SEQ_PMU_TO_NFC_RST_L_S2	154
96	GND	154
97	GPIO_PMU_NFC_TO_ARCAMP_TRIG_1V8_S4	154
98	GND	154
99	GND	154
100	NC_PP0V9_S2	154
101	PP1V24_S4	154
102	GND	154
103	GND	154
104	PP3V0_FLICKER_DET_FROM_CODEC	154
105	RET_CODEC_FROM_FLICKER_DET	154
106	ANALOG_FLICKER_DET_VIS_TO_CODEC_AIN5_N	154
107	ANALOG_FLICKER_DET_VIS_TO_CODEC_AIN5_P	154
108	ANALOG_FLICKER_DET_IR_TO_CODEC_AIN3_N	154
109	ANALOG_FLICKER_DET_IR_TO_CODEC_AIN3_P	154
110	GND	154
111	GND	154
112	GND	154
113	NC_CLK_PMU_TO_BBPMU_32K_1V8_S2	154
114	GND	154
115	GND	154
116	I2C4_AOP_SDA	154
117	I2C4_AOP_SCL	154
118	IO_PMU_TO_MANY_GLBL_MUTE_L_S4	154
119	GND	154
120	PP1V24_NFC_S2	154
121	GPIO_PMU_FROM_BB_PCIE_HOST_WAKE_L_S2	154
122	SPMI0_HEB_AOP_TO_BB_WLAN_NFC_UWB_CLK	154
123	GPIO_SEQ_PMU_TO_BBPMU_RESET_L_S2	154
124	SPMI0_HEB_AOP_BI_BB_WLAN_NFC_UWB_DATA	154
125	GPIO_PMU_TO_BB_DEBUG_EN_1VX_S2	154
126	PP3V0_ALS_RADIO_S2	154
127	GND	154
128	PP1V8_S4	154
129	GND	154
130	AMUX_DIV_STROBE_BOOST_OUT_S0	154
131	GND	154
132	PP_VDD_BOOST	154
133	GND	154
134	GND	154
135	GND	154
136	GND	154
137	GND	154
138	GND	154
139	GND	154
140	GND	154
141	GND	154
142	GND	154
143	GND	154
144	GND	154
145	GND	154
146	GND	154
147	GND	154
148	GND	154
149	GND	154
150	PP1V0_S4	154
151	GPIO_AOP_TO_BBPMU_COEX	154
152	PP1V0_UWB_ANA_S4	154
153	GND	154
154	GPIO_SCM_NUB_FROM_UWB_INT	154
155	GPIO_SEQ_PMU_TO_UWB_RESET_L_S4	154
156	GND	154
157	SPI1_AOP_TO_GNSS_UWB_PICO	154
158	SPI1_AOP_FROM_GNSS_UWB_POCI	154
159	GND	154
160	SPI1_AOP_TO_GNSS_UWB_SCLK	154
161	GPIO_AOP_TO_UWB_COREDUMP_TRIGGER	154
162	GPIO_AOP_TO_UWB_TIME_SYNC_L	154
163	GPIO_SCM_NUB_TO_UWB_SPI_CS_L	154
164	PP1V8_S4	154
165	GND	154
166	GND	154
167	GND	154
168	PP_VDD_MAIN_EAST	154
169	GND	154
170	PP_VDD_MAIN_EAST	154
171	GND	154
172	PP_VDD_MAIN_EAST	154
173	GND	154
174	PP_VDD_MAIN_EAST	154
175	GND	154
176	GND	154
177	GND	154
178	ANALOG_AUSTIN_VOUT2_TO_PMU_AMUX	154
179	ANALOG_AUSTIN_VOUT1_TO_PMU_AMUX	154
180	PP6V0_OIS	154

998-38440
J_INT_TOP
INTERPOSER-MLB-TOP-GOLDFISH-V6X
SMT-PAD
SYM 2 OF 4

155	GND	181
155	PP6V0_AF	182
155	GND	183
155	GND	184
155	SWD_NUB_TO_BB_SWCLK	185
155	SWD_NUB_BI_BB_SWDIO	186
155	GPIO_SEQ_PMU_TO_WLAN_REG_ON_S4	187
155	GPIO_AOP_TO_GNSS_CS_L	188
155	GND	189
155	GPIO_AOP_FROM_GNSS_HOST_REQ	190
155	GND	191
155	GND	192
155	CLK_GPIO_PMU_TO_WLAN_UWB_GNSS_32K_S4	193
155	GPIO_PMU_FROM_WLAN_HOST_WAKE_S2	194
155	GND	195
155	GND	196
155	GND	197
155	PCIE_GP0_AP_TO_WLAN_PERST_L	198
155	SPMI1_COEX_AOP_BI_BB_WLAN_UWB_DATA	199
155	PCIE_GP0_AP_BI_WLAN_CLKREQ_L	200
155	SPMI1_COEX_AOP_TO_BB_WLAN_UWB_CLK	201
155	SWD_NUB_BI_WLAN_PORTC_SWDIO_S2	202
155	GPIO_WLAN_TO_AP_TIME_SYNC	203
155	GND	204
155	GND	205
155	PP_VDD_MAIN_EAST	206
155	GND	207
155	PP_VDD_MAIN_EAST	208
155	GND	209
155	GPIO_SEQ_PMU_TO_WLCHGR_EN_SYS_S2	210
155	GND	211
155	CLK_GPIO_PMU_TO_BPIC_WLCHGR_32K_1V8_S2	212
155	GND	213
155	GND	214
155	GND	215
155	IO_PMU_TO_WLCHGR_RESET_L_ALWAYS	216
155	GND	217
155	SPMI1_NUB_TO_BPIC_WLCHGR_CLK	218
155	GND	219
155	SPMI1_NUB_BI_BPIC_WLCHGR_DATA	220
155	GND	221
155	GND	222
155	GND	223
155	GPIO_SCM_AOP_FROM_MAGUARI_INT_L	224
155	SWD_NUB_BI_WLCHGR_SWDIO	225
155	GPIO_AOP_TO_NFC_F_IRONMAN_EN	226
155	SWD_NUB_TO_MANY_SWCLK0_S2	227
155	GND	228
155	GND	229
155	PP_VBUS2_WLCHGR	230
155	GND	231
155	PP_VBUS2_WLCHGR	232
155	GND	233
155	PP_VBUS2_WLCHGR	234
155	GND	235
155	PP_VBUS2_WLCHGR	236
155	GND	237
155	GND	238
155	GND	239
155	GND	240
155	GND	241
155	GND	242
155	GND	243
155	GND	244
155	GND	245
155	GND	246
155	GND	247
155	GND	248
155	GND	249
155	GND	250
155	GND	251
155	GND	252
155	GND	253
155	GND	254
155	GND	255
155	GND	256
155	GND	257
155	GND	258
155	GND	259
155	GND	260
155	GND	261
155	GND	262
155	GND	263
155	GND	264
155	GND	265
155	GND	266
155	GND	267
155	GND	268
155	GND	269
155	I2C1_AOP_SDA	270

271	GND	155
272	I2C1_AOP_SCL	155
273	GND	155
274	GND	155
275	GND	155
276	ANALOG_BST2_FB_WLCHGR_TO_CHARGER	155
277	IO_CHARGER_FROM_WLCHGR_BST2_FPWM_BUCK2_ASYNC	155
278	IO_CHARGER_FROM_WLCHGR_BST2_EN	155
279	IO_WLCHGR_TO_CHARGER_VBUS2_ILIM_SEL	155
280	GND	155
281	GND	155
282	GND	155
283	GND	155
284	GPIO_WLCHGR_TO_PORTC_VBUSOUT_ALLOWED_L	155
285	GND	155
286	GPIO_PORTC_TO_WLCHGR_COEX_CLOAK_R	155
287	GPIO_AP_TO_BB_COREDUMP	155
288	GND	155
289	GPIO_NUB_FROM_BB_RESET_DETECT_L	155
290	GND	155
291	GPIO_SCM_NUB_FROM_WLAN_ERROR_DETECT	155
292	GPIO_AP_FROM_BT_AUDIO_SYNC	155
293	GND	155
294	GND	155
295	GND	155
296	GND	155
297	GND	155
298	GND	155
299	GND	155
300	GPIO_CAM_PMU1_TO_AVEDON_RESET_L_S0	155
301	GND	155
302	GND	155
303	GND	155
304	85_PCIE_GP0_AP_TO_WLAN_REFCLK_N	155
305	GND	155
306	85_PCIE_GP0_AP_TO_WLAN_REFCLK_P	155
307	GND	155
308	85_PCIE_GP0_AP_FROM_WLAN_RX_N	155
309	GND	155
310	85_PCIE_GP0_AP_FROM_WLAN_RX_P	155
311	GND	155
312	85_PCIE_GP0_AP_TO_WLAN_TX_N	155
313	GND	155
314	85_PCIE_GP0_AP_TO_WLAN_TX_P	155
315	GND	155
316	GND	155
317	GND	155
318	PPVAR_WIDE_PVDD_AF_IRIS	155
319	GND	155
320	PPVAR_CAM_PVDD	155
321	GND	155
322	GPIO_CAM_PMU1_FROM_AVEDON_INT_L_1V8	155
323	GND	155
324	AMUX_CAM_PVDD_FROM_AVEDON_S0	155
325	GND	155
326	I2C3_CAM_PMU1_SDA_1V8	155
327	GND	155
328	I2C3_CAM_PMU1_SCL_1V8	155
329	GND	155
330	GND	155
331	GPIO_CAM_PMU1_FROM_AUSTIN_INT_L_1V8	155
332	GPIO_CAM_PMU1_TO_AUSTIN_RESET_L_1V8	155
333	GPIO_AOP_TO_GNSS_TIME_MARK	155
334	GND	155
335	GND	155
336	GND	155
337	GND	155
338	GND	155
339	GND	155
340	GPIO_AP_TO_NFC_F_FWMM	155
341	GND	155
342	GPIO_AP_TO_SE_FWMM	155
343	GPIO_AP_TO_NFC_FWMM	155
344	SWD_AP_BI_UWB_SWDIO	155
345	GND	155
346	SWD_AP_TO_MANY_SWCLK2	155
347	GND	155
348	GND	155
349	GND	155
350	GND	155
351	GND	155
352	GND	155
353	GND	155
354	GND	155
355	GND	155
356	GND	155
357	NTC_RADIO_GND	155
358	NTC_RADIO_BB_SE_S2	155
359	NTC_RADIO_PA_SE_S2	155
360	GND	155

PAGE TITLE
INTERPOSER: BG (1/2) (151)

Apple Inc.

DRAWING NUMBER 051-12836
SIZE D
REVISION 4.0.0
BRANCH proto-2
PAGE 151 OF 348
SHEET 21 OF 100

NOTICE OF PROPRIETARY PROPERTY:
THE INFORMATION CONTAINED HEREIN IS THE PROPRIETARY PROPERTY OF APPLE INC.
THE POSESSOR AGREES TO THE FOLLOWING:
I TO MAINTAIN THIS DOCUMENT IN CONFIDENCE
II NOT TO REPRODUCE OR COPY IT
III NOT TO REVEAL OR PUBLISH IT IN WHOLE OR PART
IV ALL RIGHTS RESERVED

INTERPOSER: BG (2/2)

J_INT_TOP
INTERPOSER-MLB-TOP-GOLDFISH-V6X
SMT-PAD
998-38440
SYM 3 OF 4

156	PP_SRAM_S2	361	451	GND	156
156	GND	362	452	GND	156
156	GND	363	453	COIL_TO_SPKRAMP_BOT_VSENSE_NEG	156
156	GND	364	454	SPKRAMP_BOT_TO_COIL_OUT_NEG	156
156	85_PCIE_GP1_AP_TO_BB_TX_N	365	455	COIL_TO_SPKRAMP_BOT_VSENSE_POS	156
156	85_PCIE_GP1_AP_TO_BB_TX_P	366	456	SPKRAMP_BOT_TO_COIL_OUT_POS	156
156	GND	367	457	GND	156
156	85_PCIE_GP1_AP_FROM_BB_RX_N	368	458	GND	156
156	85_PCIE_GP1_AP_FROM_BB_RX_P	369	459	GND	156
156	GND	370	460	PP1V8_S2_SOUTH	156
156	85_PCIE_GP1_AP_TO_BB_REFCLK_P	371	461	GND	156
156	85_PCIE_GP1_AP_TO_BB_REFCLK_N	372	462	GND	156
156	GND	373	518	GND	156
156	85_EUSB_BB_BI_PORTC_N	374			
156	85_EUSB_BB_BI_PORTC_P	375			
156	GND	376			
156	GND	377			
156	PCIE_GP1_AP_BI_BB_CLKREQ_L	378			
156	PCIE_GP1_AP_TO_BB_PERST_L	379			
156	GND	380			
156	GND	381			
156	GND	382			
156	SWD_AP_BI_NFC_P_SWDIO	383			
156	IO_BB_FROM_PSIM_DETECT	384			
156	GPIO_AOP_TO_GNSS_ENABLE	385			
156	GND	386			
156	GND	387			
156	GND	388			
156	GND	389			
156	GND	390			
156	GND	391			
156	GND	392			
156	IO_BB_TO_SIM0_CLK	393			
156	IO_BB_BI_SIM0_DATA	394			
156	PP3V0_SIM0	395			
156	IO_BB_TO_SIM0_RESET_L	396			
156	GND	397			
156	GND	398			
156	I2S0_AOP_TO_SPKRAMP_TOP_BOT_DOUT	399			
156	I2S0_AOP_TO_SPKRAMP_TOP_BOT_ARCAMP_MCLK	400			
156	I2S0_AOP_TO_SPKRAMP_TOP_BOT_LRCLK	401			
156	I2S0_AOP_FROM_SPKRAMP_TOP_BOT_DIN	402			
156	I2S0_AOP_TO_SPKRAMP_TOP_BOT_BCLK	403			
156	I2S3_AOP_FROM_ARCAMP_CODEC_ASP3_DIN	404			
156	I2S3_AOP_TO_ARCAMP_CODEC_ASP3_LRCLK	405			
156	I2S3_AOP_TO_ARCAMP_CODEC_ASP3_DOUT	406			
156	I2S3_AOP_TO_ARCAMP_CODEC_ASP3_BCLK	407			
156	GND	408			
156	GND	409			
156	GND	410			
156	I2C3_AOP_SDA	411			
156	I2C3_AOP_SCL	412			
156	GND	413			
156	PP1V24_S2_SOUTH	414			
156	SAWTOOTH_UAT_B	415			
156	GND	416			
156	GND	417			
156	GND	418			
156	I2C_DISPLAY_SDA_1V8	419			
156	I2C_DISPLAY_SCL_1V8	420			
156	GPIO_NUB_TO_TOUCH_RESET_L	421			
156	IO_AOP_SEQ_PMU_DPMIC_TO_DISPLAY_PANICB	422			
156	PP7V2_DISPLAY_AVDDH	423			
156	GND	424			
156	GND	425			
156	PP3V5_DISPLAY_VDDEL	426			
156	PP3V5_DISPLAY_VDDEL	427			
156	GPIO_SEQ_PMU_TO_DISPLAY_RESET_L_S2	428			
156	GND	429			
156	AMUX_PMU_FROM_DISPLAY	430			
156	PNVAR_DISPLAY_VSSEL	431			
156	GND	432			
156	PNVAR_DISPLAY_VSSEL	433			
156	GND	434			
156	GND	435			
156	GND	436			
156	GND	437			
156	GND	438			
156	GND	439			
156	GND	440			
156	GND	441			
156	PP5V1_TOUCH_VDDTX_S2	442			
156	GND	443			
156	PP_VDD_MAIN_SOUTH	444			
156	PNVAR_DISPLAY_VGLL	445			
156	PP_VDD_MAIN_SOUTH	446			
156	PNVAR_DISPLAY_VGLO	447			
156	PP_VDD_MAIN_SOUTH	448			
156	GND	449			
156	PP_VDD_MAIN_SOUTH	450			

998-38440
J_INT_TOP
INTERPOSER-MLB-TOP-GOLDFISH-V6X
SMT-PAD
SYM 4 OF 4

156	GND	H_A1	H_B8	GND	156
156	GND	H_A2	H_B9	GND	156
156	GND	H_A3	H_B10	GND	156
156	GND	H_A4	H_B11	GND	156
156	GND	H_A5	H_B12	GND	156
156	GND	H_A6	H_B13	GND	156
156	GND	H_A7	H_B14	GND	156
156	GND	H_A8	H_C1	GND	156
156	GND	H_A9	H_C2	GND	156
156	GND	H_A10	H_C3	GND	156
156	GND	H_A11	H_C4	GND	156
156	GND	H_A12	H_C5	GND	156
156	GND	H_A13	H_C6	GND	156
156	GND	H_A14	H_C7	GND	156
156	GND	H_A15	H_C8	GND	156
156	GND	H_A16	H_C9	GND	156
156	GND	H_A17	H_C10	GND	156
156	GND	H_A18	H_C11	GND	156
156	GND	H_A19	H_C12	GND	156
156	GND	H_A20	H_C13	GND	156
156	GND	H_A21	H_C14	GND	156
156	GND	H_B1	H_C15	GND	156
156	GND	H_B2	H_C16	GND	156
156	GND	H_B3	H_C17	GND	156
156	GND	H_B4	H_C18	GND	156
156	GND	H_B5	H_C19	GND	156
156	GND	H_B6	H_C20	GND	156
156	GND	H_B7			

PAGE TITLE
INTERPOSER: BG (2/2) (152)

Apple Inc.

DRAWING NUMBER 051-12836
SIZE D
REVISION 4.0.0
BRANCH proto-2
PAGE 152 OF 348
SHEET 22 OF 100

NOTICE OF PROPRIETARY PROPERTY:
THE INFORMATION CONTAINED HEREIN IS THE PROPRIETARY PROPERTY OF APPLE INC.
THE POSESSOR AGREES TO THE FOLLOWING:
I TO MAINTAIN THIS DOCUMENT IN CONFIDENCE
II NOT TO REPRODUCE OR COPY IT
III NOT TO REVEAL OR PUBLISH IT IN WHOLE OR PART
IV ALL RIGHTS RESERVED

151	GND	GND	154 155 156
151	GND	GND	154 155 156
151	GND	GND	154 155 156
151	GND	GND	154 155 156
151	SOLENOID_TO_ARCAMP_VSENSE_NEG	SOLENOID_TO_ARCAMP_VSENSE_NEG	83
151	ARCAMP_TO_SOLENOID_OUT_NEG	ARCAMP_TO_SOLENOID_OUT_NEG	83
151	SOLENOID_TO_ARCAMP_VSENSE_POS	SOLENOID_TO_ARCAMP_VSENSE_POS	83
151	ARCAMP_TO_SOLENOID_OUT_POS	ARCAMP_TO_SOLENOID_OUT_POS	83
151	GND	GND	154 155 156
151	GND	GND	154 155 156
151	50_TRX_LB_LMB_MB_HB_WLAN24_ANT3	50_TRX_LB_LMB_MB_HB_WLAN24_ANT3	348
151	GND	GND	154 155 156
151	GND	GND	154 155 156
151	50_TRX_MB_HB_ANT1	50_TRX_MB_HB_ANT1	348
151	GND	GND	154 155 156
151	GND	GND	154 155 156
151	50_TRX_UHB_ANT7	50_TRX_UHB_ANT7	348
151	GND	GND	154 155 156
151	GND	GND	154 155 156
151	50_TRX_UHB_ANT9	50_TRX_UHB_ANT9	348
151	GND	GND	154 155 156
151	GND	GND	154 155 156
151	50_TRX_LMB_MB_HB_L1_ANT14	50_TRX_LMB_MB_HB_L1_ANT14	348
151	GND	GND	154 155 156
151	GND	GND	154 155 156
151	GND	GND	154 155 156
151	GND	GND	154 155 156
151	SAWTOOTH_LAT_B	SAWTOOTH_LAT_B	348
151	GND	GND	154 155 156
151	SAWTOOTH_LAT_A	SAWTOOTH_LAT_A	348
151	GND	GND	154 155 156
151	SAWTOOTH_UAT_C	SAWTOOTH_UAT_C	348
151	GND	GND	154 155 156
151	SPI0_AOP_TO_IMU_SCLK	SPI0_AOP_TO_IMU_SCLK	302
151	GPIO_SCM_NUB_FROM_IMU_DATARDY	GPIO_SCM_NUB_FROM_IMU_DATARDY	73 330
151	SPI0_AOP_FROM_IMU_POCI	SPI0_AOP_FROM_IMU_POCI	302
151	GPIO_SCM_NUB_TO_IMU_SPI_CS_L	GPIO_SCM_NUB_TO_IMU_SPI_CS_L	73
151	SPI0_AOP_TO_IMU_PICO	SPI0_AOP_TO_IMU_PICO	302
151	GND	GND	154 155 156
151	GND	GND	154 155 156
151	PDM_OUT1_CODEC_TO_SPKRAMP_TOP_CLK	PDM_OUT1_CODEC_TO_SPKRAMP_TOP_CLK	81
151	PDM_OUT1_CODEC_TO_SPKRAMP_TOP_DATA	PDM_OUT1_CODEC_TO_SPKRAMP_TOP_DATA	81
151	GPIO_AOP_TO_SPKRAMP_MON_MUTE	GPIO_AOP_TO_SPKRAMP_MON_MUTE	302
151	GPIO_AOP_TO_SPKRAMP_TOP_RESET_L	GPIO_AOP_TO_SPKRAMP_TOP_RESET_L	302
151	GND	GND	154 155 156
151	GND	GND	154 155 156
151	GND	GND	154 155 156
151	GND	GND	154 155 156
151	GND	GND	154 155 156
151	GND	GND	154 155 156
151	GND	GND	154 155 156
151	GPIO_CAMS_TO_STROBE_TRIGGER_1V8	GPIO_CAMS_TO_STROBE_TRIGGER_1V8	65 328
151	GND	GND	154 155 156
151	GND	GND	154 155 156
151	GND	GND	154 155 156
151	GND	GND	154 155 156
151	GND	GND	154 155 156
151	GND	GND	154 155 156
151	GND	GND	154 155 156
151	GND	GND	154 155 156
151	GND	GND	154 155 156
151	GND	GND	154 155 156
151	GND	GND	154 155 156
151	GND	GND	154 155 156
151	GND	GND	154 155 156
151	PP_VDD_MAIN_NORTH	PP_VDD_MAIN_NORTH	154 302
151	GND	GND	154 155 156
151	PP_VDD_MAIN_NORTH	PP_VDD_MAIN_NORTH	154 302
151	GND	GND	154 155 156
151	PP_VDD_MAIN_NORTH	PP_VDD_MAIN_NORTH	154 302
151	GND	GND	154 155 156
151	PP_VDD_MAIN_NORTH	PP_VDD_MAIN_NORTH	154 302
151	GND	GND	154 155 156
151	PP_VDD_BOOST	PP_VDD_BOOST	154 348
151	GPIO_CAM_PMU1_TO_STROBE_HWEN_1V8	GPIO_CAM_PMU1_TO_STROBE_HWEN_1V8	302
151	GPIO_PMU_TO_SPKRAMP_BOT_RESET_L_S4	GPIO_PMU_TO_SPKRAMP_BOT_RESET_L_S4	80
151	I2C2_AOP_SCL	I2C2_AOP_SCL	302
151	I2C2_AOP_SDA	I2C2_AOP_SDA	302
151	GND	GND	154 155 156
151	PP1V8_S2_NORTH	PP1V8_S2_NORTH	302
151	GND	GND	154 155 156
151	GND	GND	154 155 156
151	GPIO_AP_FROM_NFC_P_BOOT_STOP	GPIO_AP_FROM_NFC_P_BOOT_STOP	346
151	PP1V24_S2_NORTH	PP1V24_S2_NORTH	302
151	GND	GND	154 155 156
151	GND	GND	154 155 156
151	RET_CODEC_FROM_MIC2_REAR	RET_CODEC_FROM_MIC2_REAR	120
151	ANALOG_MIC2_REAR_TO_CODEC_AIN2_N	ANALOG_MIC2_REAR_TO_CODEC_AIN2_N	120
151	PP_CODEC_TO_MIC2_REAR_BIAS	PP_CODEC_TO_MIC2_REAR_BIAS	120
151	ANALOG_MIC2_REAR_TO_CODEC_AIN2_P	ANALOG_MIC2_REAR_TO_CODEC_AIN2_P	120

151	GND	GND	154 155 156
151	GND	GND	154 155 156
151	GND	GND	154 155 156
151	GPIO_PMU_NFC_TO_ARCAMP_RESET_L_1V8_S4	GPIO_PMU_NFC_TO_ARCAMP_RESET_L_1V8_S4	83
151	GPIO_SEQ_PMU_TO_NFC_RST_L_S2	GPIO_SEQ_PMU_TO_NFC_RST_L_S2	346
151	GND	GND	154 155 156
151	GPIO_PMU_NFC_TO_ARCAMP_TRIG_1V8_S4	GPIO_PMU_NFC_TO_ARCAMP_TRIG_1V8_S4	83
151	GND	GND	154 155 156
151	GND	GND	154 155 156
151	NC_PP0V9_S2	NC_PP0V9_S2	NO_TEST=TRUE
151	PP1V24_S4	PP1V24_S4	302
151	GND	GND	154 155 156
151	GND	GND	154 155 156
151	PP3V0_FLICKER_DET_FROM_CODEC	PP3V0_FLICKER_DET_FROM_CODEC	121
151	RET_CODEC_FROM_FLICKER_DET	RET_CODEC_FROM_FLICKER_DET	121
151	ANALOG_FLICKER_DET_VIS_TO_CODEC_AIN6_N	ANALOG_FLICKER_DET_VIS_TO_CODEC_AIN6_N	121
151	ANALOG_FLICKER_DET_VIS_TO_CODEC_AIN6_P	ANALOG_FLICKER_DET_VIS_TO_CODEC_AIN6_P	121
151	ANALOG_FLICKER_DET_IR_TO_CODEC_AIN5_N	ANALOG_FLICKER_DET_IR_TO_CODEC_AIN5_N	121
151	ANALOG_FLICKER_DET_IR_TO_CODEC_AIN5_P	ANALOG_FLICKER_DET_IR_TO_CODEC_AIN5_P	121
151	GND	GND	154 155 156
151	GND	GND	154 155 156
151	GND	GND	154 155 156
151	NC_CLK_PMU_TO_BBPMU_32K_1V8_S2	NC_CLK_PMU_TO_BBPMU_32K_1V8_S2	NO_TEST=TRUE
151	GND	GND	154 155 156
151	GND	GND	154 155 156
151	I2C4_AOP_SDA	I2C4_AOP_SDA	302
151	I2C4_AOP_SCL	I2C4_AOP_SCL	302
151	IO_PMU_TO_MANY_GLBL_MUTE_L_S4	IO_PMU_TO_MANY_GLBL_MUTE_L_S4	302 347
151	GND	GND	154 155 156
151	PP1V24_NFC_S2	PP1V24_NFC_S2	302
151	GPIO_PMU_FROM_BB_PCIE_HOST_WAKE_L_S2	GPIO_PMU_FROM_BB_PCIE_HOST_WAKE_L_S2	348
151	SPMI0_HEB_AOP_TO_BB_WLAN_NFC_UWB_CLK	SPMI0_HEB_AOP_TO_BB_WLAN_NFC_UWB_CLK	333 346 347 348
151	GPIO_SEQ_PMU_TO_BBPMU_RESET_L_S2	GPIO_SEQ_PMU_TO_BBPMU_RESET_L_S2	348
151	SPMI0_HEB_AOP_BI_BB_WLAN_NFC_UWB_DATA	SPMI0_HEB_AOP_BI_BB_WLAN_NFC_UWB_DATA	333 346 347 348
151	GPIO_PMU_TO_BB_DEBUG_EN_1VX_S2	GPIO_PMU_TO_BB_DEBUG_EN_1VX_S2	348
151	PP3V0_ALS_RADIO_S2	PP3V0_ALS_RADIO_S2	348
151	GND	GND	154 155 156
151	PP1V8_S4	PP1V8_S4	154 302
151	GND	GND	154 155 156
151	AMUX_DIV_STROBE_BOOST_OUT_S0	AMUX_DIV_STROBE_BOOST_OUT_S0	65
151	GND	GND	154 155 156
151	PP_VDD_BOOST	PP_VDD_BOOST	154 348
151	GND	GND	154 155 156
151	GND	GND	154 155 156
151	GND	GND	154 155 156
151	GND	GND	154 155 156
151	GND	GND	154 155 156
151	GND	GND	154 155 156
151	GND	GND	154 155 156
151	GND	GND	154 155 156
151	GND	GND	154 155 156
151	GND	GND	154 155 156
151	GND	GND	154 155 156
151	GND	GND	154 155 156
151	GND	GND	154 155 156
151	GND	GND	154 155 156
151	GND	GND	154 155 156
151	GND	GND	154 155 156
151	GND	GND	154 155 156
151	PP1V0_S4	PP1V0_S4	333
151	GPIO_AOP_TO_BBPMU_COEX	GPIO_AOP_TO_BBPMU_COEX	348
151	PP1V0_UWB_ANA_S4	PP1V0_UWB_ANA_S4	333
151	GND	GND	154 155 156
151	GPIO_SCM_NUB_FROM_UWB_INT	GPIO_SCM_NUB_FROM_UWB_INT	333
151	GPIO_SEQ_PMU_TO_UWB_RESET_L_S4	GPIO_SEQ_PMU_TO_UWB_RESET_L_S4	333
151	GND	GND	154 155 156
151	SPI1_AOP_TO_GNSS_UWB_PICO	SPI1_AOP_TO_GNSS_UWB_PICO	302 333 348
151	SPI1_AOP_FROM_GNSS_UWB_POCI	SPI1_AOP_FROM_GNSS_UWB_POCI	302 333 348
151	GND	GND	154 155 156
151	SPI1_AOP_TO_GNSS_UWB_SCLK	SPI1_AOP_TO_GNSS_UWB_SCLK	302 333 348
151	GPIO_AOP_TO_UWB_COREDUMP_TRIGGER	GPIO_AOP_TO_UWB_COREDUMP_TRIGGER	333
151	GPIO_AOP_TO_UWB_TIME_SYNC_L	GPIO_AOP_TO_UWB_TIME_SYNC_L	333
151	GPIO_SCM_NUB_TO_UWB_SPI_CS_L	GPIO_SCM_NUB_TO_UWB_SPI_CS_L	333
151	PP1V8_S4	PP1V8_S4	154 302
151	GND	GND	154 155 156
151	GND	GND	154 155 156
151	GND	GND	154 155 156
151	PP_VDD_MAIN_EAST	PP_VDD_MAIN_EAST	154 155 302
151	GND	GND	154 155 156
151	PP_VDD_MAIN_EAST	PP_VDD_MAIN_EAST	154 155 302
151	GND	GND	154 155 156
151	PP_VDD_MAIN_EAST	PP_VDD_MAIN_EAST	154 155 302
151	GND	GND	154 155 156
151	PP_VDD_MAIN_EAST	PP_VDD_MAIN_EAST	154 155 302
151	GND	GND	154 155 156
151	GND	GND	154 155 156
151	GND	GND	154 155 156
151	ANALOG_AUSTIN_VOUT2_TO_PMU_AMUX	ANALOG_AUSTIN_VOUT2_TO_PMU_AMUX	63
151	ANALOG_AUSTIN_VOUT1_TO_PMU_AMUX	ANALOG_AUSTIN_VOUT1_TO_PMU_AMUX	63
151	PP6V0_OIS	PP6V0_OIS	63

PAGE TITLE
INTERPOSER: Aliases (1/3) (154)

Apple Inc.

DRAWING NUMBER 051-12836 SIZE D

REVISION 4.0.0

BRANCH proto-2

NOTICE OF PROPRIETARY PROPERTY:

THE INFORMATION CONTAINED HEREIN IS THE PROPRIETARY PROPERTY OF APPLE INC.
THE POSESSOR AGREES TO THE FOLLOWING:

I TO MAINTAIN THIS DOCUMENT IN CONFIDENCE
II NOT TO REPRODUCE OR COPY IT
III NOT TO REVEAL OR PUBLISH IT IN WHOLE OR PART
IV ALL RIGHTS RESERVED

Page	Net	Alias	Pages
151	GND	GND	154 155 156
151	PP6V0_AF	PP6V0_AF	63
151	GND	GND	154 155 156
151	GND	GND	154 155 156
151	SWD_NUB_TO_BB_SWCLK	SWD_NUB_TO_BB_SWCLK	348
151	SWD_NUB_BI_BB_SWDIO	SWD_NUB_BI_BB_SWDIO	348
151	GPIO_SEQ_PMU_TO_WLAN_REG_ON_S4	GPIO_SEQ_PMU_TO_WLAN_REG_ON_S4	347
151	GPIO_AOP_TO_GNSS_CS_L	GPIO_AOP_TO_GNSS_CS_L	348
151	GND	GND	154 155 156
151	GPIO_AOP_FROM_GNSS_HOST_REQ	GPIO_AOP_FROM_GNSS_HOST_REQ	348
151	GND	GND	154 155 156
151	GND	GND	154 155 156
151	CLK_GPIO_PMU_TO_WLAN_UWB_GNSS_32K_S4	CLK_GPIO_PMU_TO_WLAN_UWB_GNSS_32K_S4	333 347 348
151	GPIO_PMU_FROM_WLAN_HOST_WAKE_S2	GPIO_PMU_FROM_WLAN_HOST_WAKE_S2	347
151	GND	GND	154 155 156
151	GND	GND	154 155 156
151	GND	GND	154 155 156
151	PCIE_GP0_AP_TO_WLAN_PERST_L	PCIE_GP0_AP_TO_WLAN_PERST_L	347
151	SPMI1_COEX_AOP_BI_BB_WLAN_UWB_DATA	SPMI1_COEX_AOP_BI_BB_WLAN_UWB_DATA	333 347 348
151	PCIE_GP0_AP_BI_WLAN_CLKREQ_L	PCIE_GP0_AP_BI_WLAN_CLKREQ_L	347
151	SPMI1_COEX_AOP_TO_BB_WLAN_UWB_CLK	SPMI1_COEX_AOP_TO_BB_WLAN_UWB_CLK	333 347 348
151	SWD_NUB_BI_WLAN_PORTC_SWDIO_S2	SWD_NUB_BI_WLAN_PORTC_SWDIO_S2	347
151	GPIO_WLAN_TO_AP_TIME_SYNC	GPIO_WLAN_TO_AP_TIME_SYNC	347
151	GND	GND	154 155 156
151	GND	GND	154 155 156
151	PP_VDD_MAIN_EAST	PP_VDD_MAIN_EAST	154 155 302
151	GND	GND	154 155 156
151	PP_VDD_MAIN_EAST	PP_VDD_MAIN_EAST	154 155 302
151	GND	GND	154 155 156
151	GPIO_SEQ_PMU_TO_WLCHGR_EN_SYS_S2	GPIO_SEQ_PMU_TO_WLCHGR_EN_SYS_S2	44 330
151	GND	GND	154 155 156
151	CLK_GPIO_PMU_TO_BPIC_WLCHGR_32K_1V8_S2	CLK_GPIO_PMU_TO_BPIC_WLCHGR_32K_1V8_S2	302
151	GND	GND	154 155 156
151	GND	GND	154 155 156
151	GND	GND	154 155 156
151	IO_PMU_TO_WLCHGR_RESET_L_ALWAYS	IO_PMU_TO_WLCHGR_RESET_L_ALWAYS	44
151	GND	GND	154 155 156
151	SPMI1_NUB_TO_BPIC_WLCHGR_CLK	SPMI1_NUB_TO_BPIC_WLCHGR_CLK	302
151	GND	GND	154 155 156
151	SPMI1_NUB_BI_BPIC_WLCHGR_DATA	SPMI1_NUB_BI_BPIC_WLCHGR_DATA	302
151	GND	GND	154 155 156
151	GND	GND	154 155 156
151	GND	GND	154 155 156
151	GPIO_SCM_AOP_FROM_MAGUARI_INT_L	GPIO_SCM_AOP_FROM_MAGUARI_INT_L	104
151	SWD_NUB_BI_WLCHGR_SWDIO	SWD_NUB_BI_WLCHGR_SWDIO	302 330
151	GPIO_AOP_TO_NFC_F_IRONMAN_EN	GPIO_AOP_TO_NFC_F_IRONMAN_EN	346
151	SWD_NUB_TO_MANY_SWCLK0_S2	SWD_NUB_TO_MANY_SWCLK0_S2	302 347
151	GND	GND	154 155 156
151	GND	GND	154 155 156
151	PP_VBUS2_WLCHGR	PP_VBUS2_WLCHGR	44 155 328
151	GND	GND	154 155 156
151	PP_VBUS2_WLCHGR	PP_VBUS2_WLCHGR	44 155 328
151	GND	GND	154 155 156
151	PP_VBUS2_WLCHGR	PP_VBUS2_WLCHGR	44 155 328
151	GND	GND	154 155 156
151	PP_VBUS2_WLCHGR	PP_VBUS2_WLCHGR	44 155 328
151	GND	GND	154 155 156
151	GND	GND	154 155 156
151	GND	GND	154 155 156
151	GND	GND	154 155 156
151	GND	GND	154 155 156
151	GND	GND	154 155 156
151	GND	GND	154 155 156
151	GND	GND	154 155 156
151	GND	GND	154 155 156
151	GND	GND	154 155 156
151	GND	GND	154 155 156
151	GND	GND	154 155 156
151	GND	GND	154 155 156
151	GND	GND	154 155 156
151	GND	GND	154 155 156
151	GND	GND	154 155 156
151	GND	GND	154 155 156
151	GND	GND	154 155 156
151	GND	GND	154 155 156
151	GND	GND	154 155 156
151	GND	GND	154 155 156
151	GND	GND	154 155 156
151	GND	GND	154 155 156
151	GND	GND	154 155 156
151	GND	GND	154 155 156
151	GND	GND	154 155 156
151	GND	GND	154 155 156
151	GND	GND	154 155 156
151	GND	GND	154 155 156
151	GND	GND	154 155 156
151	GND	GND	154 155 156
151	I2C1_AOP_SDA	I2C1_AOP_SDA	104

Page	Net	Alias	Pages
151	GND	GND	154 155 156
151	I2C1_AOP_SCL	I2C1_AOP_SCL	104
151	GND	GND	154 155 156
151	GND	GND	154 155 156
151	GND	GND	154 155 156
151	ANALOG_BST2_FB_WLCHGR_TO_CHARGER	ANALOG_BST2_FB_WLCHGR_TO_CHARGER	302
151	IO_CHARGER_FROM_WLCHGR_BST2_FPWM_BUCK2_ASYNC	IO_CHARGER_FROM_WLCHGR_BST2_FPWM_BUCK2_ASYNC	302 330
151	IO_CHARGER_FROM_WLCHGR_BST2_EN	IO_CHARGER_FROM_WLCHGR_BST2_EN	44 330
151	IO_WLCHGR_TO_CHARGER_VBUS2_ILIM_SEL	IO_WLCHGR_TO_CHARGER_VBUS2_ILIM_SEL	302 330
151	GND	GND	154 155 156
151	GND	GND	154 155 156
151	GND	GND	154 155 156
151	GND	GND	154 155 156
151	GPIO_WLCHGR_TO_PORTC_VBUSOUT_ALLOWED_L	GPIO_WLCHGR_TO_PORTC_VBUSOUT_ALLOWED_L	302
151	GND	GND	154 155 156
151	GPIO_PORTC_TO_WLCHGR_COEX_CLOAK_R	GPIO_PORTC_TO_WLCHGR_COEX_CLOAK_R	302
151	GPIO_AP_TO_BB_COREDUMP	GPIO_AP_TO_BB_COREDUMP	348
151	GND	GND	154 155 156
151	GPIO_NUB_FROM_BB_RESET_DETECT_L	GPIO_NUB_FROM_BB_RESET_DETECT_L	330 348
151	GND	GND	154 155 156
151	GPIO_SCM_NUB_FROM_WLAN_ERROR_DETECT	GPIO_SCM_NUB_FROM_WLAN_ERROR_DETECT	347
151	GPIO_AP_FROM_BT_AUDIO_SYNC	GPIO_AP_FROM_BT_AUDIO_SYNC	347
151	GND	GND	154 155 156
151	GND	GND	154 155 156
151	GND	GND	154 155 156
151	GND	GND	154 155 156
151	GND	GND	154 155 156
151	GND	GND	154 155 156
151	GND	GND	154 155 156
151	GPIO_CAM_PMU1_TO_AVEDON_RESET_L_HV	GPIO_CAM_PMU1_TO_AVEDON_RESET_L_HV	61
151	GND	GND	154 155 156
151	GND	GND	154 155 156
151	GND	GND	154 155 156
151	85_PCIE_GP0_AP_TO_WLAN_REFCLK_N	85_PCIE_GP0_AP_TO_WLAN_REFCLK_N	347
151	GND	GND	154 155 156
151	85_PCIE_GP0_AP_TO_WLAN_REFCLK_P	85_PCIE_GP0_AP_TO_WLAN_REFCLK_P	347
151	GND	GND	154 155 156
151	85_PCIE_GP0_AP_FROM_WLAN_RX_N	85_PCIE_GP0_AP_FROM_WLAN_RX_N	347
151	GND	GND	154 155 156
151	85_PCIE_GP0_AP_FROM_WLAN_RX_P	85_PCIE_GP0_AP_FROM_WLAN_RX_P	347
151	GND	GND	154 155 156
151	85_PCIE_GP0_AP_TO_WLAN_TX_N	85_PCIE_GP0_AP_TO_WLAN_TX_N	347
151	GND	GND	154 155 156
151	85_PCIE_GP0_AP_TO_WLAN_TX_P	85_PCIE_GP0_AP_TO_WLAN_TX_P	347
151	GND	GND	154 155 156
151	GND	GND	154 155 156
151	GND	GND	154 155 156
151	PPVAR_WIDE_PVDD_AF_IRIS	PPVAR_WIDE_PVDD_AF_IRIS	61
151	GND	GND	154 155 156
151	PPVAR_CAM_PVDD	PPVAR_CAM_PVDD	61
151	GND	GND	154 155 156
151	GPIO_CAM_PMU1_FROM_AVEDON_INT_L_1V8	GPIO_CAM_PMU1_FROM_AVEDON_INT_L_1V8	61 330
151	GND	GND	154 155 156
151	AMUX_CAM_PVDD_FROM_AVEDON_S0	AMUX_CAM_PVDD_FROM_AVEDON_S0	61
151	GND	GND	154 155 156
151	I2C3_CAM_PMU1_SDA_1V8	I2C3_CAM_PMU1_SDA_1V8	302
151	GND	GND	154 155 156
151	I2C3_CAM_PMU1_SCL_1V8	I2C3_CAM_PMU1_SCL_1V8	302
151	GND	GND	154 155 156
151	GND	GND	154 155 156
151	GPIO_CAM_PMU1_FROM_AUSTIN_INT_L_1V8	GPIO_CAM_PMU1_FROM_AUSTIN_INT_L_1V8	63
151	GPIO_CAM_PMU1_TO_AUSTIN_RESET_L_1V8	GPIO_CAM_PMU1_TO_AUSTIN_RESET_L_1V8	63
151	GPIO_AOP_TO_GNSS_TIME_MARK	GPIO_AOP_TO_GNSS_TIME_MARK	348
151	GND	GND	154 155 156
151	GND	GND	154 155 156
151	GND	GND	154 155 156
151	GND	GND	154 155 156
151	GND	GND	154 155 156
151	GND	GND	154 155 156
151	GPIO_AP_TO_NFC_F_FWMM	GPIO_AP_TO_NFC_F_FWMM	346
151	GND	GND	154 155 156
151	GPIO_AP_TO_SE_FWMM	GPIO_AP_TO_SE_FWMM	346
151	GPIO_AP_TO_NFC_FWMM	GPIO_AP_TO_NFC_FWMM	346
151	SWD_AP_BI_UWB_SWDIO	SWD_AP_BI_UWB_SWDIO	333
151	GND	GND	154 155 156
151	SWD_AP_TO_MANY_SWCLK2	SWD_AP_TO_MANY_SWCLK2	333 346
151	GND	GND	154 155 156
151	GND	GND	154 155 156
151	GND	GND	154 155 156
151	GND	GND	154 155 156
151	GND	GND	154 155 156
151	GND	GND	154 155 156
151	GND	GND	154 155 156
151	GND	GND	154 155 156
151	GND	GND	154 155 156
151	GND	GND	154 155 156
151	NTC_RADIO_GND	NTC_RADIO_GND	50
151	NTC_RADIO_BB_SE_S2	NTC_RADIO_BB_SE_S2	50
151	NTC_RADIO_PA_SE_S2	NTC_RADIO_PA_SE_S2	50
151	GND	GND	154 155 156

PAGE TITLE
INTERPOSER: Aliases (2/3) (155)

Apple Inc.

DRAWING NUMBER 051-12836 SIZE D
REVISION 4.0.0
BRANCH proto-2

NOTICE OF PROPRIETARY PROPERTY:
THE INFORMATION CONTAINED HEREIN IS THE PROPRIETARY PROPERTY OF APPLE INC.
THE POSESSOR AGREES TO THE FOLLOWING:
I TO MAINTAIN THIS DOCUMENT IN CONFIDENCE
II NOT TO REPRODUCE OR COPY IT
III NOT TO REVEAL OR PUBLISH IT IN WHOLE OR PART
IV ALL RIGHTS RESERVED

152	PP_SRAM_S2	PP_SRAM_S2	348
152	GND	GND	154 155 156
152	GND	GND	154 155 156
152	GND	GND	154 155 156
152	85_PCIE_GP1_AP_TO_BB_TX_N	85_PCIE_GP1_AP_TO_BB_TX_N	348
152	85_PCIE_GP1_AP_TO_BB_TX_P	85_PCIE_GP1_AP_TO_BB_TX_P	348
152	GND	GND	154 155 156
152	85_PCIE_GP1_AP_FROM_BB_RX_N	85_PCIE_GP1_AP_FROM_BB_RX_N	348
152	85_PCIE_GP1_AP_FROM_BB_RX_P	85_PCIE_GP1_AP_FROM_BB_RX_P	348
152	GND	GND	154 155 156
152	85_PCIE_GP1_AP_TO_BB_REFCLK_P	85_PCIE_GP1_AP_TO_BB_REFCLK_P	348
152	85_PCIE_GP1_AP_TO_BB_REFCLK_N	85_PCIE_GP1_AP_TO_BB_REFCLK_N	348
152	GND	GND	154 155 156
152	85_EUSB_BB_BI_PORTC_N	85_EUSB_BB_BI_PORTC_N	348
152	85_EUSB_BB_BI_PORTC_P	85_EUSB_BB_BI_PORTC_P	348
152	GND	GND	154 155 156
152	GND	GND	154 155 156
152	PCIE_GP1_AP_BI_BB_CLKREQ_L	PCIE_GP1_AP_BI_BB_CLKREQ_L	348
152	PCIE_GP1_AP_TO_BB_PERST_L	PCIE_GP1_AP_TO_BB_PERST_L	348
152	GND	GND	154 155 156
152	GND	GND	154 155 156
152	GND	GND	154 155 156
152	SWD_AP_BI_NFC_P_SWDIO	SWD_AP_BI_NFC_P_SWDIO	328 346
152	IO_BB_FROM_PSIM_DETECT	IO_BB_FROM_PSIM_DETECT	348
152	GPIO_AOP_TO_GNSS_ENABLE	GPIO_AOP_TO_GNSS_ENABLE	348
152	GND	GND	154 155 156
152	GND	GND	154 155 156
152	GND	GND	154 155 156
152	GND	GND	154 155 156
152	GND	GND	154 155 156
152	GND	GND	154 155 156
152	GND	GND	154 155 156
152	IO_BB_TO_SIM0_CLK	IO_BB_TO_SIM0_CLK	348
152	IO_BB_BI_SIM0_DATA	IO_BB_BI_SIM0_DATA	348
152	PP3V0_SIM0	PP3V0_SIM0	348
152	IO_BB_TO_SIM0_RESET_L	IO_BB_TO_SIM0_RESET_L	348
152	GND	GND	154 155 156
152	GND	GND	154 155 156
152	I2S0_AOP_TO_SPKRAMP_TOP_BOT_DOUT	I2S0_AOP_TO_SPKRAMP_TOP_BOT_DOUT	302
152	I2S0_AOP_TO_SPKRAMP_TOP_BOT_ARCAMP_MCLK	I2S0_AOP_TO_SPKRAMP_TOP_BOT_ARCAMP_MCLK	302
152	I2S0_AOP_TO_SPKRAMP_TOP_BOT_LRCLK	I2S0_AOP_TO_SPKRAMP_TOP_BOT_LRCLK	302
152	I2S0_AOP_FROM_SPKRAMP_TOP_BOT_DIN	I2S0_AOP_FROM_SPKRAMP_TOP_BOT_DIN	302
152	I2S0_AOP_TO_SPKRAMP_TOP_BOT_BCLK	I2S0_AOP_TO_SPKRAMP_TOP_BOT_BCLK	302
152	I2S3_AOP_FROM_ARCAMP_CODEC_ASP3_DIN	I2S3_AOP_FROM_ARCAMP_CODEC_ASP3_DIN	83
152	I2S3_AOP_TO_ARCAMP_CODEC_ASP3_LRCLK	I2S3_AOP_TO_ARCAMP_CODEC_ASP3_LRCLK	83
152	I2S3_AOP_TO_ARCAMP_CODEC_ASP3_DOUT	I2S3_AOP_TO_ARCAMP_CODEC_ASP3_DOUT	83
152	I2S3_AOP_TO_ARCAMP_CODEC_ASP3_BCLK	I2S3_AOP_TO_ARCAMP_CODEC_ASP3_BCLK	83
152	GND	GND	154 155 156
152	GND	GND	154 155 156
152	GND	GND	154 155 156
152	I2C3_AOP_SDA	I2C3_AOP_SDA	302
152	I2C3_AOP_SCL	I2C3_AOP_SCL	302
152	GND	GND	154 155 156
152	PP1V24_S2_SOUTH	PP1V24_S2_SOUTH	302
152	SAWTOOTH_UAT_B	SAWTOOTH_UAT_B	120 348
152	GND	GND	154 155 156
152	GND	GND	154 155 156
152	GND	GND	154 155 156
152	I2C_DISPLAY_SDA_1V8	I2C_DISPLAY_SDA_1V8	93
152	I2C_DISPLAY_SCL_1V8	I2C_DISPLAY_SCL_1V8	93
152	GPIO_NUB_TO_TOUCH_RESET_L	GPIO_NUB_TO_TOUCH_RESET_L	302
152	IO_AOP_SEQ_PMU_DPMIC_TO_DISPLAY_PANICB_L	IO_AOP_SEQ_PMU_DPMIC_TO_DISPLAY_PANICB_L	93
152	PP7V2_DISPLAY_AVDDH	PP7V2_DISPLAY_AVDDH	302
152	GND	GND	154 155 156
152	GND	GND	154 155 156
152	PP3V5_DISPLAY_VDDEL	PP3V5_DISPLAY_VDDEL	91 156 302
152	PP3V5_DISPLAY_VDDEL	PP3V5_DISPLAY_VDDEL	91 156 302
152	GPIO_SEQ_PMU_TO_DISPLAY_RESET_L_S2	GPIO_SEQ_PMU_TO_DISPLAY_RESET_L_S2	93
152	GND	GND	154 155 156
152	AMUX_PMU_FROM_DISPLAY	AMUX_PMU_FROM_DISPLAY	93
152	PNVAR_DISPLAY_VSSEL	PNVAR_DISPLAY_VSSEL	93 156
152	GND	GND	154 155 156
152	PNVAR_DISPLAY_VSSEL	PNVAR_DISPLAY_VSSEL	93 156
152	GND	GND	154 155 156
152	GND	GND	154 155 156
152	GND	GND	154 155 156
152	GND	GND	154 155 156
152	GND	GND	154 155 156
152	GND	GND	154 155 156
152	GND	GND	154 155 156
152	GND	GND	154 155 156
152	PP5V1_TOUCH_VDDTX_S2	PP5V1_TOUCH_VDDTX_S2	92
152	GND	GND	154 155 156
152	PP_VDD_MAIN_SOUTH	PP_VDD_MAIN_SOUTH	156 302
152	PNVAR_DISPLAY_VGLL	PNVAR_DISPLAY_VGLL	93
152	PP_VDD_MAIN_SOUTH	PP_VDD_MAIN_SOUTH	156 302
152	PNVAR_DISPLAY_VGLO	PNVAR_DISPLAY_VGLO	93
152	PP_VDD_MAIN_SOUTH	PP_VDD_MAIN_SOUTH	156 302
152	GND	GND	154 155 156
152	PP_VDD_MAIN_SOUTH	PP_VDD_MAIN_SOUTH	156 302

152	GND	GND	154 155 156
152	GND	GND	154 155 156
152	COIL_TO_SPKRAMP_BOT_VSENSE_NEG	COIL_TO_SPKRAMP_BOT_VSENSE_NEG	80
152	SPKRAMP_BOT_TO_COIL_OUT_NEG	SPKRAMP_BOT_TO_COIL_OUT_NEG	80
152	COIL_TO_SPKRAMP_BOT_VSENSE_POS	COIL_TO_SPKRAMP_BOT_VSENSE_POS	80
152	SPKRAMP_BOT_TO_COIL_OUT_POS	SPKRAMP_BOT_TO_COIL_OUT_POS	80
152	GND	GND	154 155 156
152	GND	GND	154 155 156
152	GND	GND	154 155 156
152	PP1V8_S2_SOUTH	PP1V8_S2_SOUTH	302
152	GND	GND	154 155 156
152	GND	GND	154 155 156
152	GND	GND	154 155 156

152	GND	GND	154 155 156
152	GND	GND	154 155 156
152	GND	GND	154 155 156
152	GND	GND	154 155 156
152	GND	GND	154 155 156
152	GND	GND	154 155 156
152	GND	GND	154 155 156
152	GND	GND	154 155 156
152	GND	GND	154 155 156
152	GND	GND	154 155 156
152	GND	GND	154 155 156
152	GND	GND	154 155 156
152	GND	GND	154 155 156
152	GND	GND	154 155 156
152	GND	GND	154 155 156
152	GND	GND	154 155 156
152	GND	GND	154 155 156
152	GND	GND	154 155 156
152	GND	GND	154 155 156
152	GND	GND	154 155 156
152	GND	GND	154 155 156
152	GND	GND	154 155 156
152	GND	GND	154 155 156
152	GND	GND	154 155 156
152	GND	GND	154 155 156
152	GND	GND	154 155 156
152	GND	GND	154 155 156
152	GND	GND	154 155 156
152	GND	GND	154 155 156
152	GND	GND	154 155 156
152	GND	GND	154 155 156
152	GND	GND	154 155 156
152	GND	GND	154 155 156
152	GND	GND	154 155 156
152	GND	GND	154 155 156
152	GND	GND	154 155 156
152	GND	GND	154 155 156
152	GND	GND	154 155 156
152	GND	GND	154 155 156
152	GND	GND	154 155 156
152	GND	GND	154 155 156
152	GND	GND	154 155 156
152	GND	GND	154 155 156
152	GND	GND	154 155 156
152	GND	GND	154 155 156
152	GND	GND	154 155 156
152	GND	GND	154 155 156
152	GND	GND	154 155 156
152	GND	GND	154 155 156
152	GND	GND	154 155 156
152	GND	GND	154 155 156
152	GND	GND	154 155 156
152	GND	GND	154 155 156
152	GND	GND	154 155 156
152	GND	GND	154 155 156

PAGE TITLE

INTERPOSER: Aliases (3/3) (156)

Apple Inc.

DRAWING NUMBER 051-12836 SIZE D

REVISION 4.0.0

BRANCH proto-2

NOTICE OF PROPRIETARY PROPERTY:

THE INFORMATION CONTAINED HEREIN IS THE PROPRIETARY PROPERTY OF APPLE INC.
THE POSESSOR AGREES TO THE FOLLOWING:

I TO MAINTAIN THIS DOCUMENT IN CONFIDENCE
II NOT TO REPRODUCE OR COPY IT
III NOT TO REVEAL OR PUBLISH IT IN WHOLE OR PART
IV ALL RIGHTS RESERVED

FF SPECIFIC ALIASES (BG)

SYSTEM POWER ALIASES

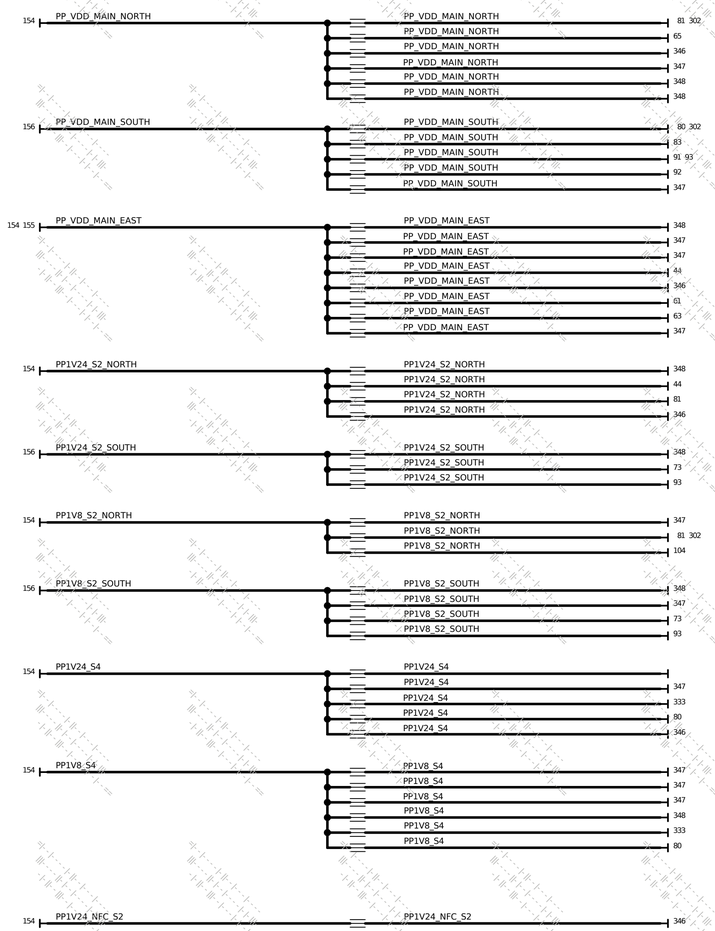

CAM I2C

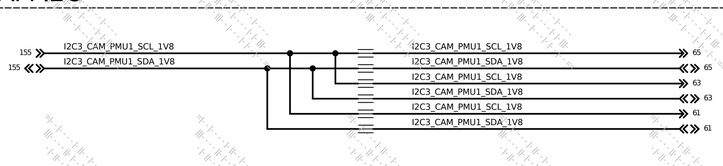

TOUCH (ELM)

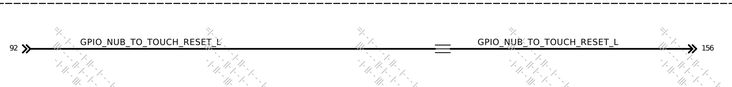

WLCHGR

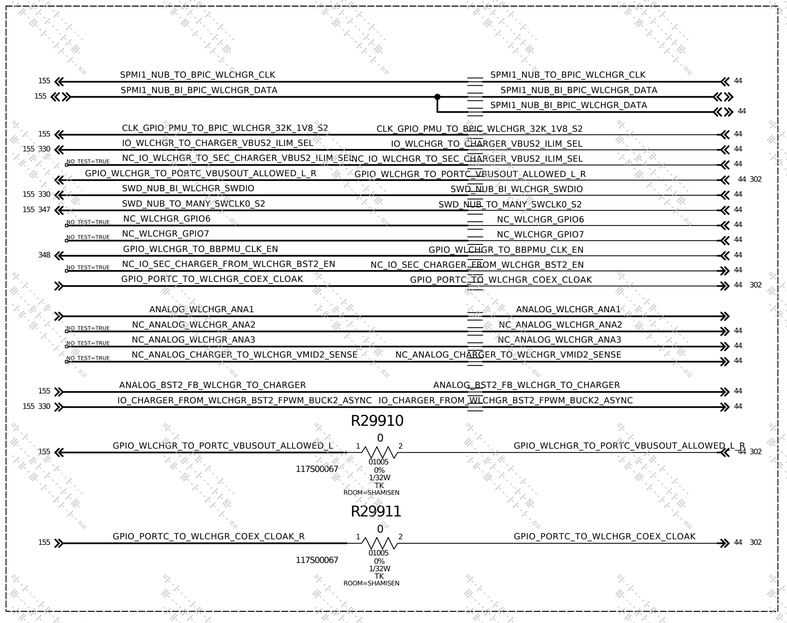

STROBE DRIVER

DPMIC (CIRO)

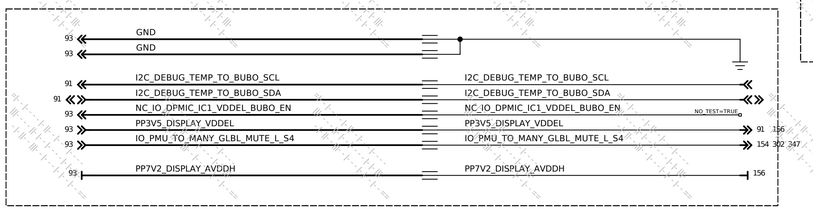

AOP/MTP I2C

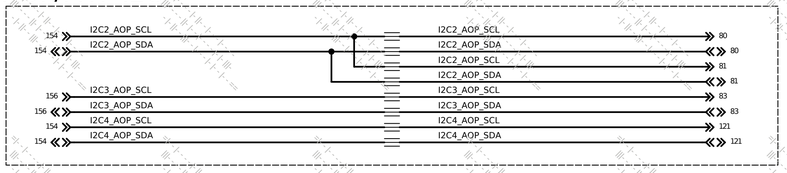

IMU SPI

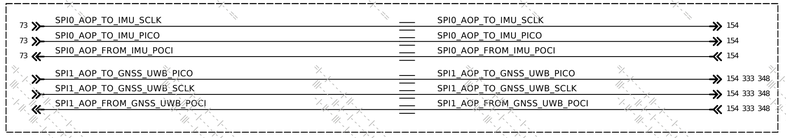

AUDIO/HAPTICS

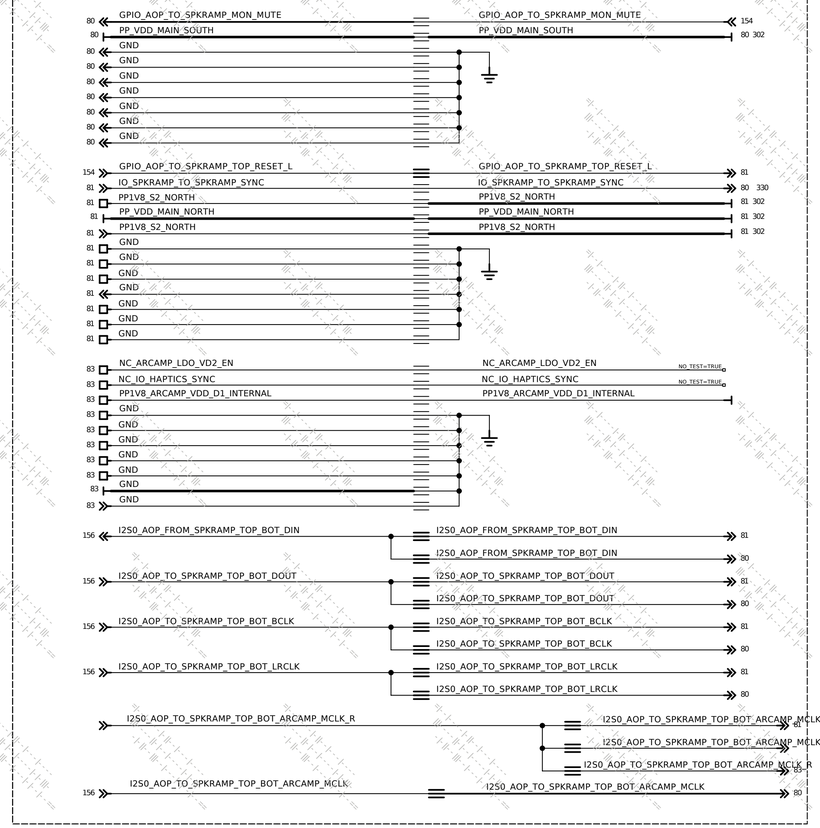

BB

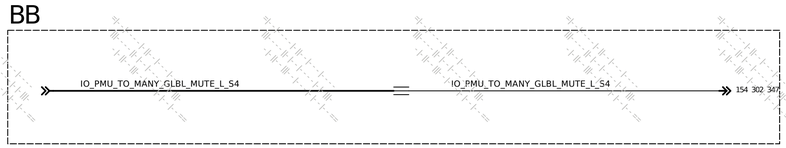

SYNCING:D9X

PAGE TITLE	SYSTEM: FF Specific Aliases (BG) (302)
Apple Inc.	DRAWING NUMBER 051-12836 SIZE D
	REVISION 4.0.0
NOTICE OF PROPRIETARY PROPERTY: THE INFORMATION CONTAINED HEREIN IS THE PROPRIETARY PROPERTY OF APPLE INC. THE POSESSOR AGREES TO THE FOLLOWING: I TO MAINTAIN THIS DOCUMENT IN CONFIDENCE II NOT TO REPRODUCE OR COPY IT III NOT TO REVEAL OR PUBLISH IT IN WHOLE OR PART IV ALL RIGHTS RESERVED	BRANCH proto-2
	PAGE 302 OF 348
	SHEET 26 OF 100

Test Points

VDD_MAIN

Wireless Charging

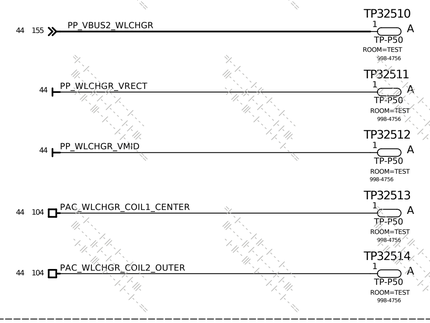

GND

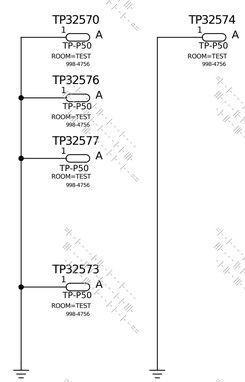

NFC

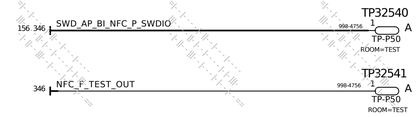

Strobe

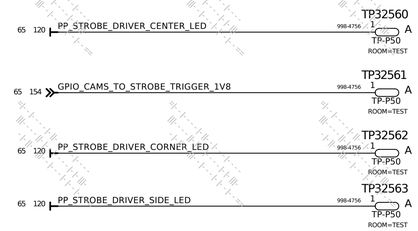

Fiducials

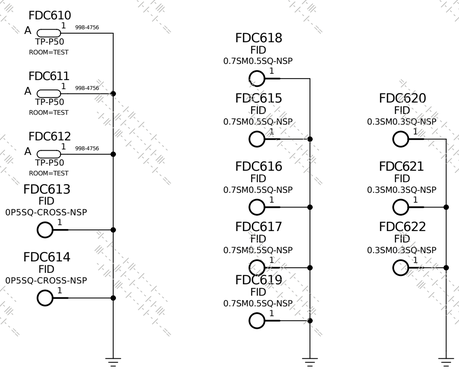

SYNCING: V5X

PAGE TITLE	TESTING: Test Points (BG) (328)
Apple Inc.	DRAWING NUMBER 051-12836 SIZE D
	REVISION 4.0.0
	BRANCH proto-2
	PAGE 328 OF 348
	SHEET 27 OF 100

NOTICE OF PROPRIETARY PROPERTY:
THE INFORMATION CONTAINED HEREIN IS THE PROPRIETARY PROPERTY OF APPLE INC.
THE POSESSOR AGREES TO THE FOLLOWING:
I TO MAINTAIN THIS DOCUMENT IN CONFIDENCE
II NOT TO REPRODUCE OR COPY IT
III NOT TO REVEAL OR PUBLISH IT IN WHOLE OR PART
IV ALL RIGHTS RESERVED

Probe Points

SHAMISEN

155 302 IO_CHARGER_FROM_WLCHGR_BST2_FPWM_BUCK2_ASYNC — 1 — PP32702 P2MM-NSM SM ROOM=PTY1 998-6110

44 155 GPIO_SEQ_PMU_TO_WLCHGR_EN_SYS_S2 — 1 — PP32703 P2MM-NSM SM ROOM=PTY1 998-6110

44 I2C_SDA_WLCHGR — 1 — PP32709 P2MM-NSM SM ROOM=PTY3 998-6110

44 I2C_SCL_WLCHGR — 1 — PP32710 P2MM-NSM SM ROOM=PTY3 998-6110

44 IO_WLCHGR_INT — 1 — PP32711 P2MM-NSM SM ROOM=PTY3 998-6110

155 302 SWD_NUB_BI_WLCHGR_SWDIO — 1 — PP32712 P2MM-NSM SM ROOM=PTY3 998-6110

44 155 IO_CHARGER_FROM_WLCHGR_BST2_EN — 1 — PP32713 P2MM-NSM SM ROOM=PTY1 998-6110

155 302 IO_WLCHGR_TO_CHARGER_VBUS2_ILIM_SEL — 1 — PP32714 P2MM-NSM SM ROOM=PTY1 998-6110

80 302 IO_SPKRAMP_TO_SPKRAMP_SYNC — 1 — PP32715 P2MM-NSM SM ROOM=PTY3 998-6110

91 93 IO_DPMIC_TO_VDDEL_LDO_EN — 1 — PP32716 P2MM-NSM SM ROOM=PTY3 998-6110

61 155 GPIO_CAM_PMU1_FROM_AVEDON_INT_L_1V8 — 1 — PP32717 P2MM-NSM SM ROOM=PTY3 998-6110

STROBE

MAGUARI

SPMI0

NFC

DPMIC

SOC

155 348 GPIO_NUB_FROM_BB_RESET_DETECT_L — 1 — PP32765 P2MM-NSM SM ROOM=PTY1 998-6110

IMU

73 IMU_TEST_MODE_1 — 1 — PP12802 P2MM-NSM SM ROOM=PTY2 998-6110

73 IMU_TEST_MODE_2 — 1 — PP12818 P2MM-NSM SM ROOM=PTY2 998-6110

73 154 GPIO_SCM_NUB_FROM_IMU_DATARDY — 1 — PP12819 P2MM-NSM SM ROOM=PTY2 998-6110

73 IMU_INT2 — 1 — PP12825 P2MM-NSM SM ROOM=PTY2 998-6110

SYNCING: V5X

PAGE TITLE	TESTING: Probe Points (BG) (330)
Apple Inc.	DRAWING NUMBER 051-12836 SIZE D
	REVISION 4.0.0
	BRANCH proto-2
	PAGE 330 OF 348
	SHEET 28 OF 100

NOTICE OF PROPRIETARY PROPERTY:
THE INFORMATION CONTAINED HEREIN IS THE PROPRIETARY PROPERTY OF APPLE INC.
THE POSESSOR AGREES TO THE FOLLOWING:
I TO MAINTAIN THIS DOCUMENT IN CONFIDENCE
II NOT TO REPRODUCE OR COPY IT
III NOT TO REVEAL OR PUBLISH IT IN WHOLE OR PART
IV ALL RIGHTS RESERVED

ARROW HIERARCHY

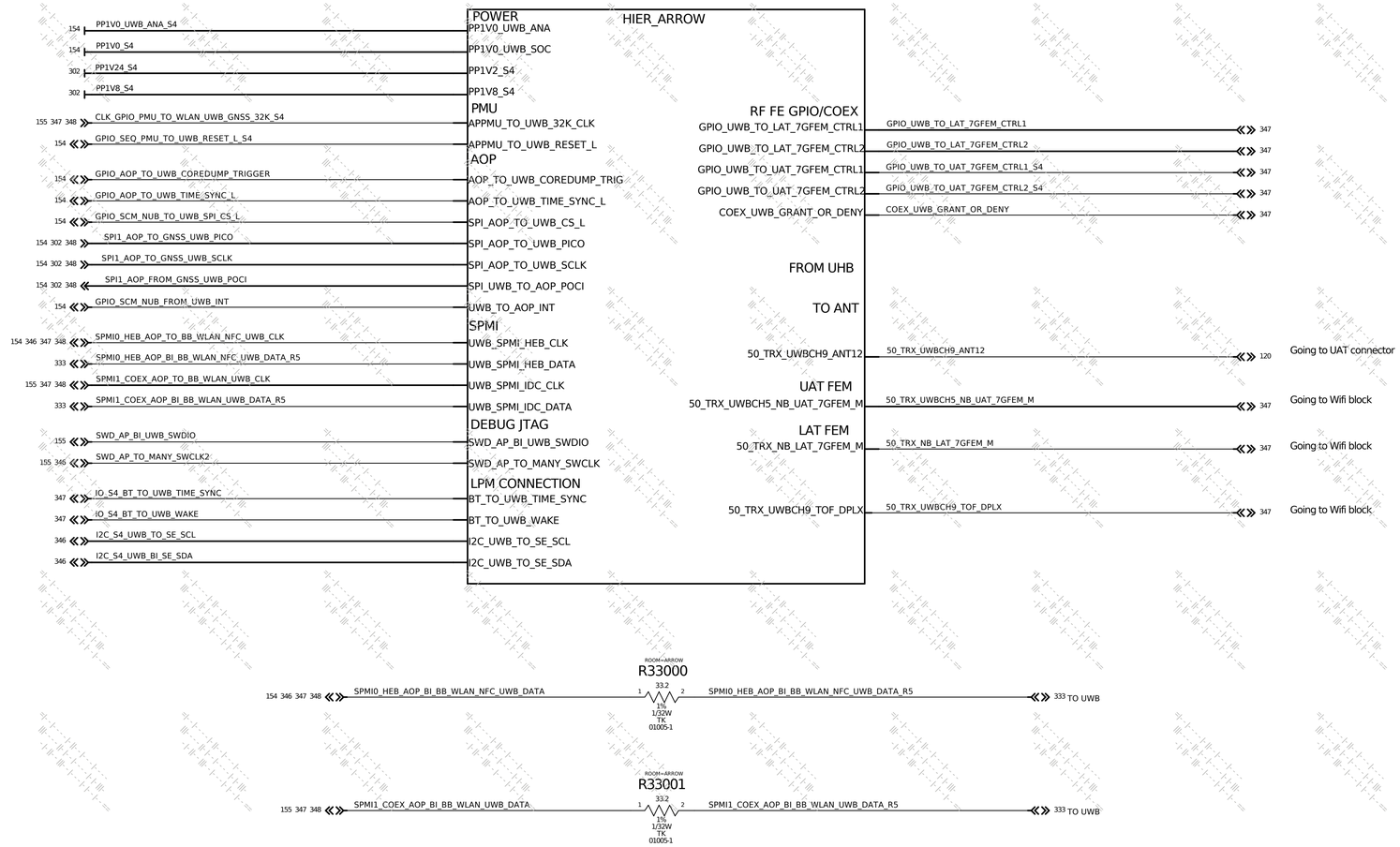

PAGE TITLE
HIERARCHIES: ARROW (333)

Apple Inc.

DRAWING NUMBER 051-12836 | SIZE D
REVISION 4.0.0
BRANCH proto-2
PAGE 333 OF 348
SHEET 29 OF 100

NOTICE OF PROPRIETARY PROPERTY:
THE INFORMATION CONTAINED HEREIN IS THE PROPRIETARY PROPERTY OF APPLE INC.
THE POSESSOR AGREES TO THE FOLLOWING:
I TO MAINTAIN THIS DOCUMENT IN CONFIDENCE
II NOT TO REPRODUCE OR COPY IT
III NOT TO REVEAL OR PUBLISH IT IN WHOLE OR PART
IV ALL RIGHTS RESERVED

NFC HIERARCHY

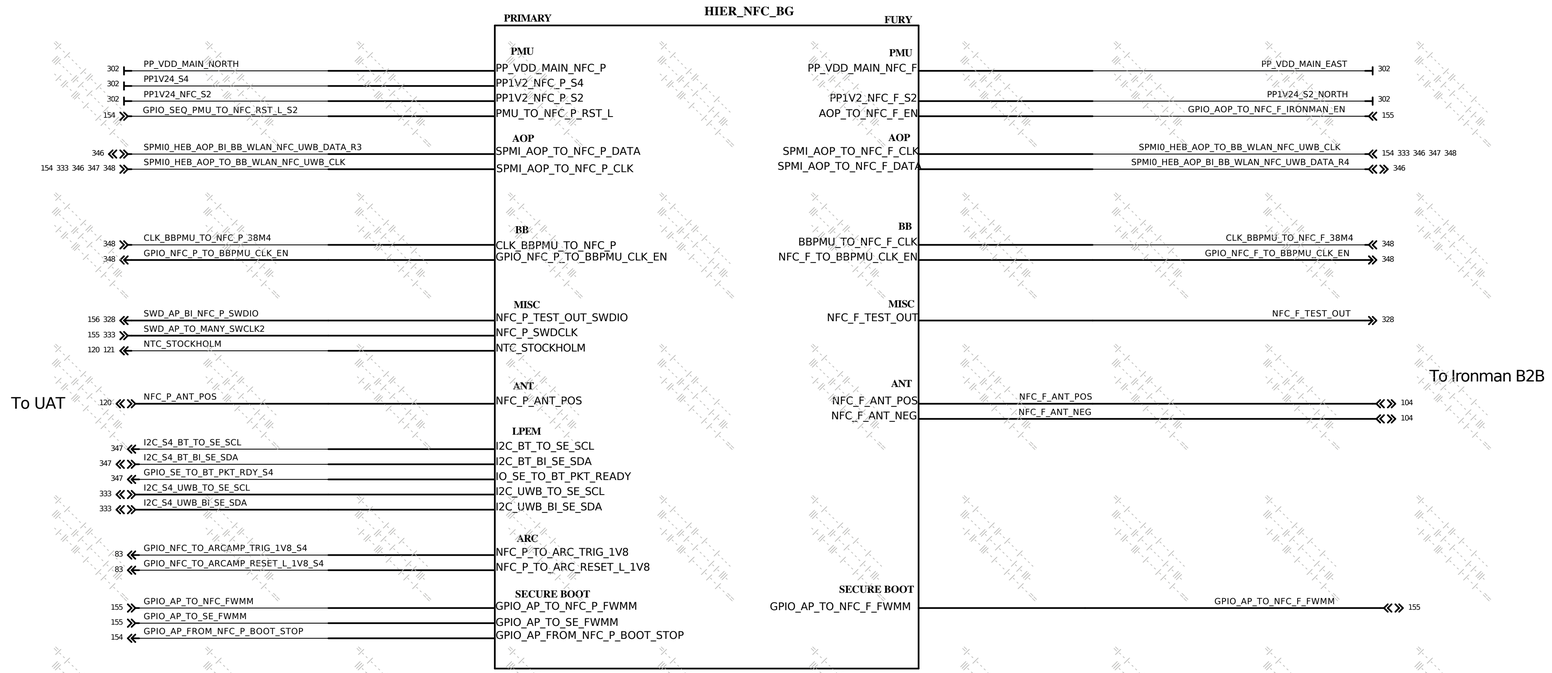

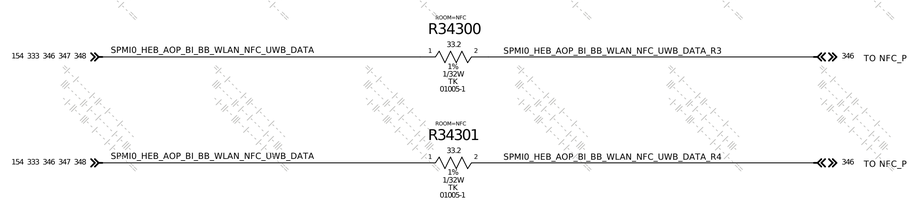

PAGE TITLE
HIERARCHIES: NFC (346)

Apple Inc.

DRAWING NUMBER 051-12836
SIZE D
REVISION 4.0.0
BRANCH proto-2
PAGE 346 OF 348
SHEET 30 OF 100

NOTICE OF PROPRIETARY PROPERTY:
THE INFORMATION CONTAINED HEREIN IS THE PROPRIETARY PROPERTY OF APPLE INC.
THE POSESSOR AGREES TO THE FOLLOWING:
I TO MAINTAIN THIS DOCUMENT IN CONFIDENCE
II NOT TO REPRODUCE OR COPY IT
III NOT TO REVEAL OR PUBLISH IT IN WHOLE OR PART
IV ALL RIGHTS RESERVED

WIFI HIERARCHY

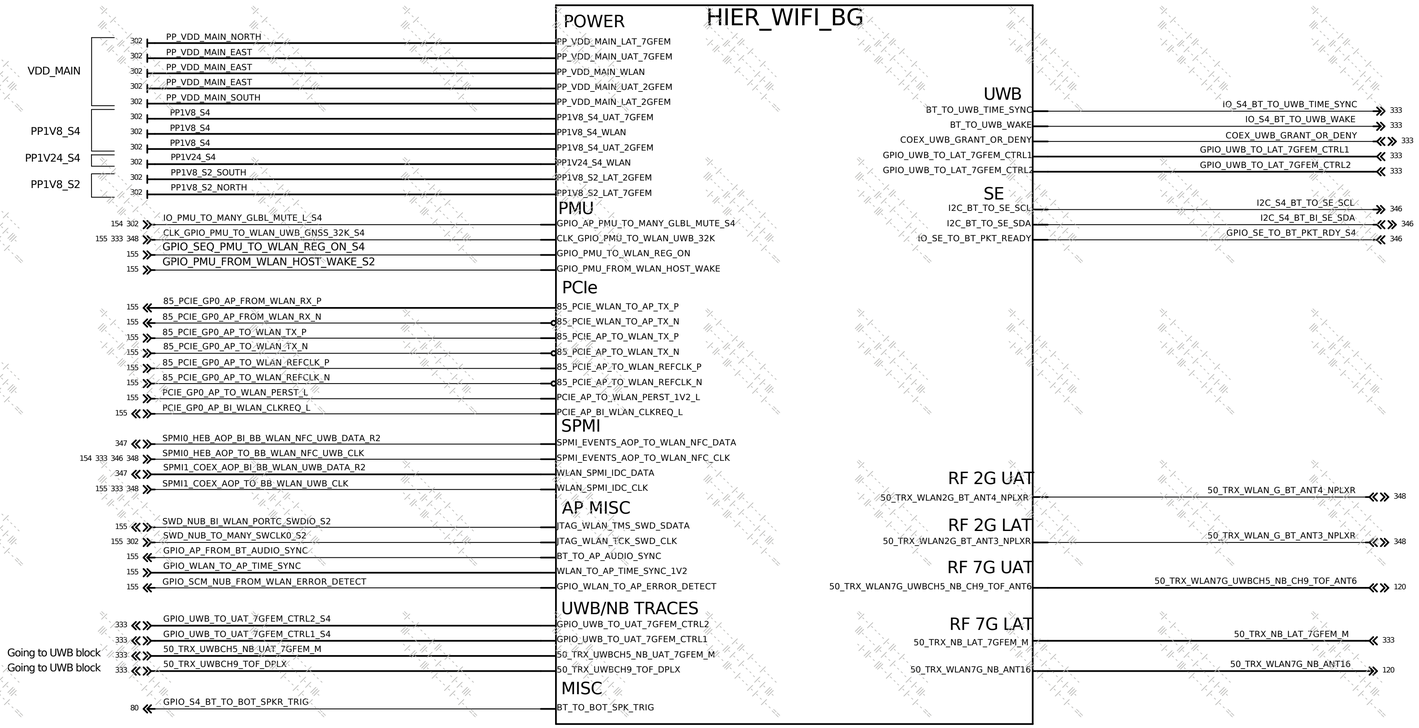

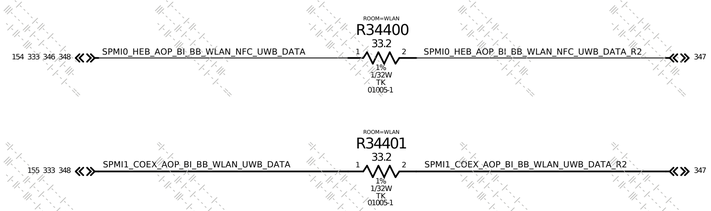

WLAN Mechanical Caps

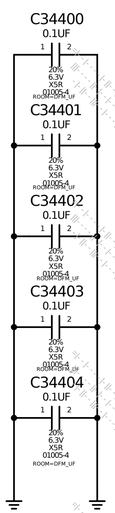

SYNCING: V5X

PAGE TITLE	HIERARCHIES: WIFI (347)
Apple Inc.	DRAWING NUMBER 051-12836 · SIZE D
	REVISION 4.0.0
	BRANCH proto-2
	PAGE 347 OF 348
	SHEET 31 OF 100

NOTICE OF PROPRIETARY PROPERTY:
THE INFORMATION CONTAINED HEREIN IS THE PROPRIETARY PROPERTY OF APPLE INC.
THE POSESSOR AGREES TO THE FOLLOWING:
I TO MAINTAIN THIS DOCUMENT IN CONFIDENCE
II NOT TO REPRODUCE OR COPY IT
III NOT TO REVEAL OR PUBLISH IT IN WHOLE OR PART
IV ALL RIGHTS RESERVED

RADIO HIERARCHY

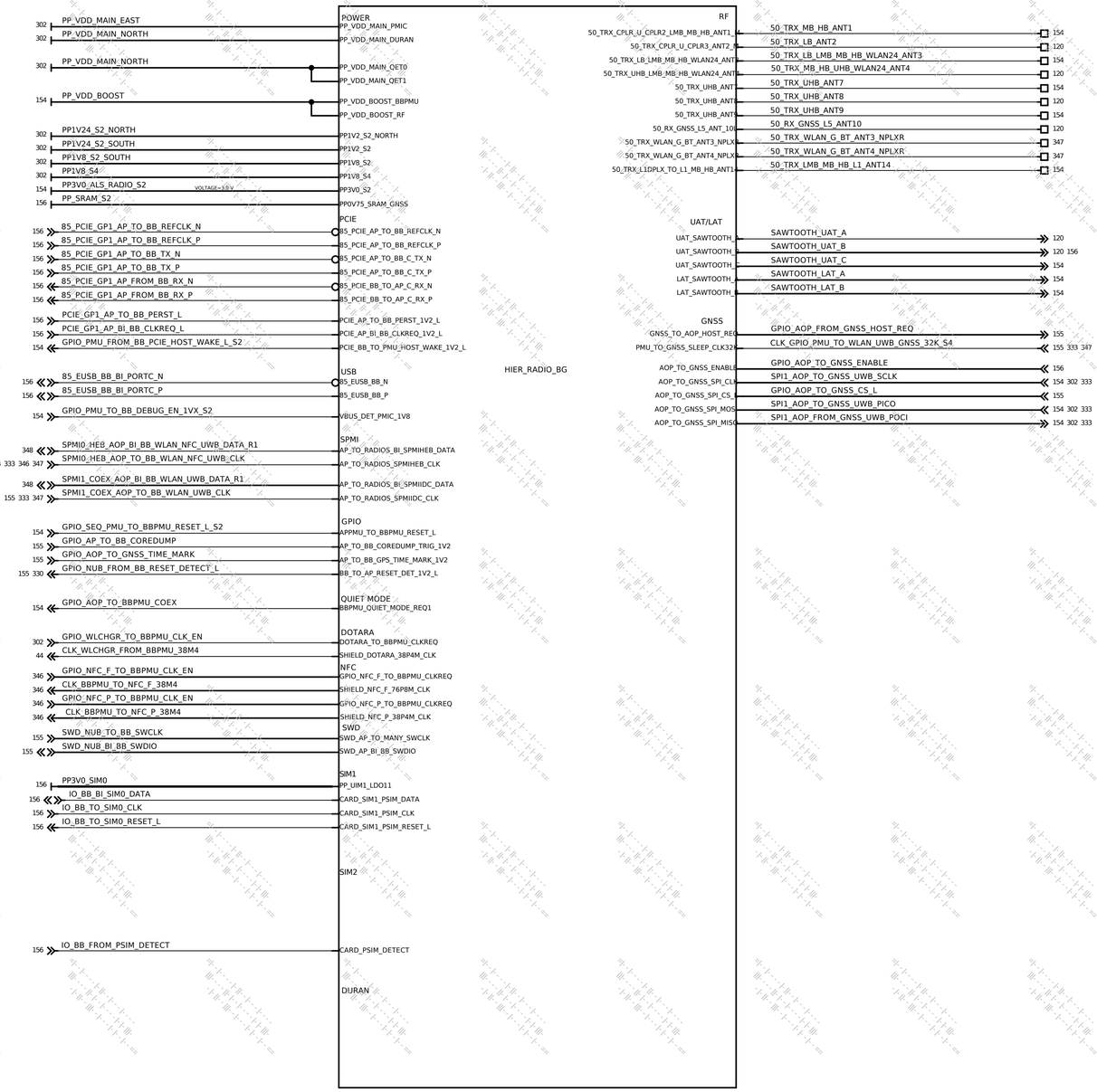

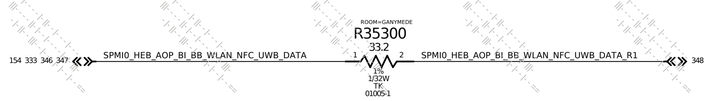

PAGE TITLE
HIERARCHIES: RADIO (348)

Apple Inc.

DRAWING NUMBER 051-12836 | SIZE D
REVISION 4.0.0
BRANCH proto-2
PAGE 348 OF 348
SHEET 32 OF 100

NOTICE OF PROPRIETARY PROPERTY:
THE INFORMATION CONTAINED HEREIN IS THE PROPRIETARY PROPERTY OF APPLE INC.
THE POSESSOR AGREES TO THE FOLLOWING:
I TO MAINTAIN THIS DOCUMENT IN CONFIDENCE
II NOT TO REPRODUCE OR COPY IT
III NOT TO REVEAL OR PUBLISH IT IN WHOLE OR PART
IV ALL RIGHTS RESERVED

REV	ECN	DESCRIPTION OF REVISION	CK APPD / DATE
4	0073816450	ENGINEERING RELEASED	2025-11-19

ARROW MLB

SHEET	PAGE/CSA	CONTENTS	SYNC LABEL	SYNC DATE
1	1	Table		
2	2	Interface		
3	3	Tanami		

DRAWING TITLE: SCH,MLB,BG,V64

Apple Inc.

DRAWING NUMBER: 051-12836 | SIZE: D

REVISION: 4.0.0

BRANCH: proto-2

PAGE: 1 OF 5

SHEET: 33 OF 100

NOTICE OF PROPRIETARY PROPERTY:

THE INFORMATION CONTAINED HEREIN IS THE PROPRIETARY PROPERTY OF APPLE INC.
THE POSESSOR AGREES TO THE FOLLOWING:
I TO MAINTAIN THIS DOCUMENT IN CONFIDENCE
II NOT TO REPRODUCE OR COPY IT
III NOT TO REVEAL OR PUBLISH IT IN WHOLE OR PART
IV ALL RIGHTS RESERVED

REV	ECN	DESCRIPTION OF REVISION	CK APPD / DATE
4	0073816450	ENGINEERING RELEASED	2025-11-19

ARROW Interface Signals

POWER

350 351	PWR	PP1V24_S4	350 351
350 351	PWR	PP1V8_S4	350 351
350 351	PWR	PP1V0_UWB_ANA_S4	350 351
350 351	PWR	PP1V0_S4	350 351

HOST IPC

350 351	PWR	SPI1_AOP_TO_GNSS_UWB_SCLK	350 351
350 351	PWR	GPIO_SCM_NUB_TO_UWB_SPI_CS_L	350 351
350 351	PWR	SPI1_AOP_FROM_GNSS_UWB_POCI	350 351
350 351	PWR	SPI1_AOP_TO_GNSS_UWB_PICO	350 351
350 351	PWR	GPIO_AOP_TO_UWB_COREDUMP_TRIGGER	350 351
350 351	PWR	GPIO_SCM_NUB_FROM_UWB_INT	350 351

RESET/CLOCK

350 351	PWR	GPIO_SEQ_PMU_TO_UWB_RESET_L_S4	350 351
350 351	PWR	CLK_GPIO_PMU_TO_WLAN_UWB_GNSS_32K_S4	350 351
350 351	PWR	GPIO_AOP_TO_UWB_TIME_SYNC_L	350 351

DEBUG

350 351	PWR	SWD_AP_TO_MANY_SWCLK2	350 351
350 351	PWR	SWD_AP_BI_UWB_SWDIO	350 351

SPMI

350 351	PWR	SPMI1_COEX_AOP_TO_BB_WLAN_UWB_CLK	350 351
350 351	PWR	SPMI1_COEX_AOP_BI_BB_WLAN_UWB_DATA_B5	350 351
350 351	PWR	SPMI0_HEB_AOP_TO_BB_WLAN_NFC_UWB_CLK	350 351
350 351	PWR	SPMI0_HEB_AOP_BI_BB_WLAN_NFC_UWB_DATA_B5	350 351
350 351	PWR	COEX_UWB_GRANT_OR_DENY	350 351

SE I2C

350 351	PWR	I2C_S4_UWB_TO_SE_SCL	350 351
350 351	PWR	I2C_S4_UWB_BI_SE_SDA	350 351

BT TIME SYNC / WAKE

350 351	PWR	IO_S4_BT_TO_UWB_TIME_SYNC	350 351
350 351	PWR	IO_S4_BT_TO_UWB_WAKE	350 351

NB RFEM CTRL

350 352	PWR	GPIO_UWB_TO_UAT_7GFEM_CTRL1_S4	350 352
350 352	PWR	GPIO_UWB_TO_UAT_7GFEM_CTRL2_S4	350 352
350 352	PWR	GPIO_UWB_TO_LAT_7GFEM_CTRL1	350 352
350 352	PWR	GPIO_UWB_TO_LAT_7GFEM_CTRL2	350 352

7GFEM_RF

350 352	50_TRX_UWBCH5_NB_UAT_7GFEM_M	OUT	350 352
350 352	50_TRX_NB_LAT_7GFEM_M	OUT	350 352

ANTENNA

350 352	50_TRX_UWBCH9_TOF_DPLX	OUT	350 352
350 353	50_TRX_UWBCH9_ANT12	OUT	350 353

DRAWING TITLE: SCH,MLB,BG,V64

Apple Inc.

NOTICE OF PROPRIETARY PROPERTY:
THE INFORMATION CONTAINED HEREIN IS THE PROPRIETARY PROPERTY OF APPLE INC.
THE POSESSOR AGREES TO THE FOLLOWING:
I TO MAINTAIN THIS DOCUMENT IN CONFIDENCE
II NOT TO REPRODUCE OR COPY IT
III NOT TO REVEAL OR PUBLISH IT IN WHOLE OR PART
IV ALL RIGHTS RESERVED

DRAWING NUMBER: 051-12836
SIZE: D
REVISION: 4.0.0
BRANCH: proto-2
PAGE: 2 OF 5
SHEET: 34 OF 100

MODULE

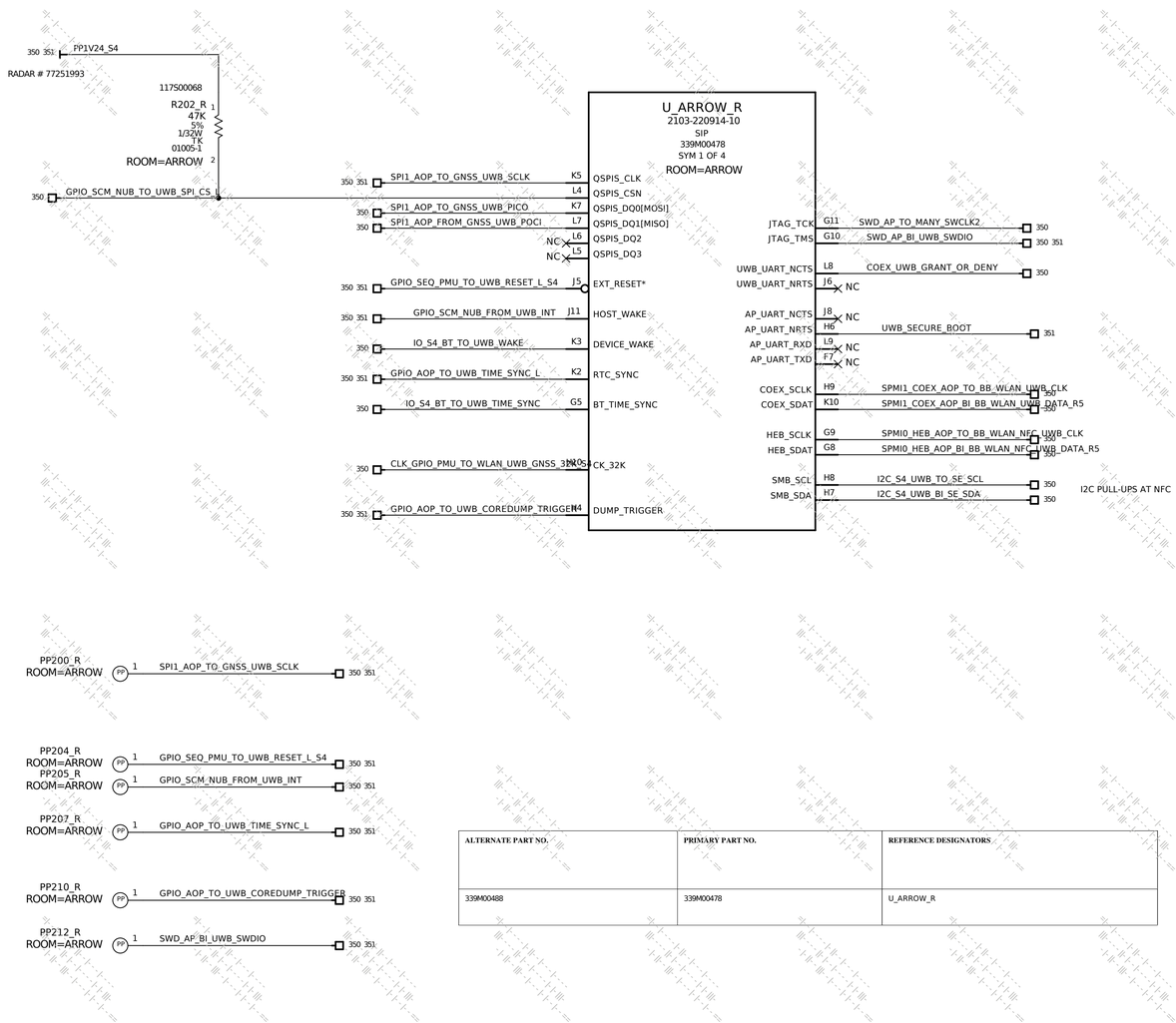

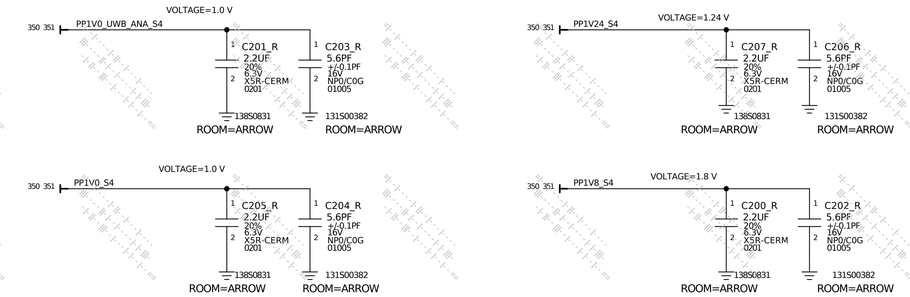

ALTERNATE PART NO.	PRIMARY PART NO.	REFERENCE DESIGNATORS
339M00488	339M00478	U_ARROW_R

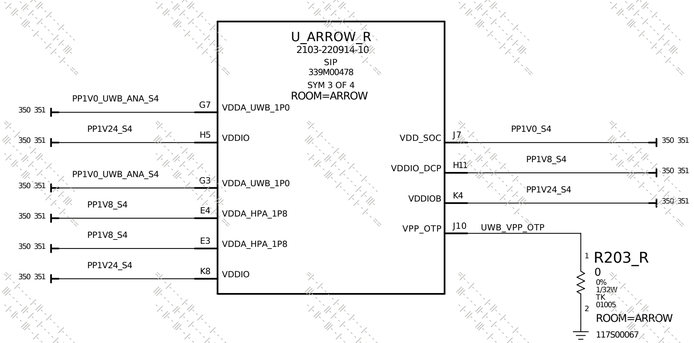

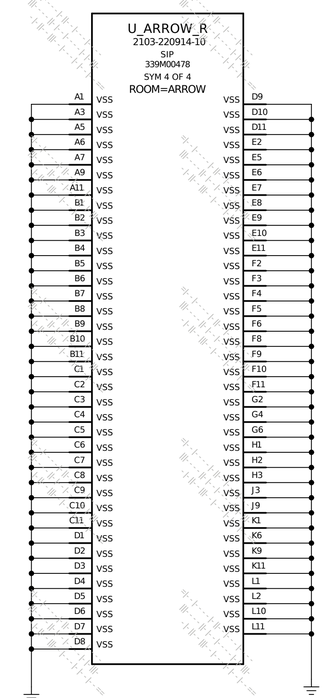

UNSECURE BOOT BOOTSTRAP PULLUP

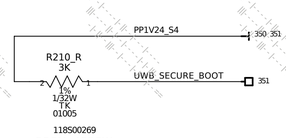

PAGE TITLE: Tanami (3)

Apple Inc.

NOTICE OF PROPRIETARY PROPERTY:
THE INFORMATION CONTAINED HEREIN IS THE PROPRIETARY PROPERTY OF APPLE INC.
THE POSESSOR AGREES TO THE FOLLOWING:
I TO MAINTAIN THIS DOCUMENT IN CONFIDENCE
II NOT TO REPRODUCE OR COPY IT
III NOT TO REVEAL OR PUBLISH IT IN WHOLE OR PART
IV ALL RIGHTS RESERVED

DRAWING NUMBER: 051-12836
SIZE: D
REVISION: 4.0.0
BRANCH: proto-2
PAGE: 3 OF 5
SHEET: 35 OF 100

FILTERS/MATCHING AND ANTENNA

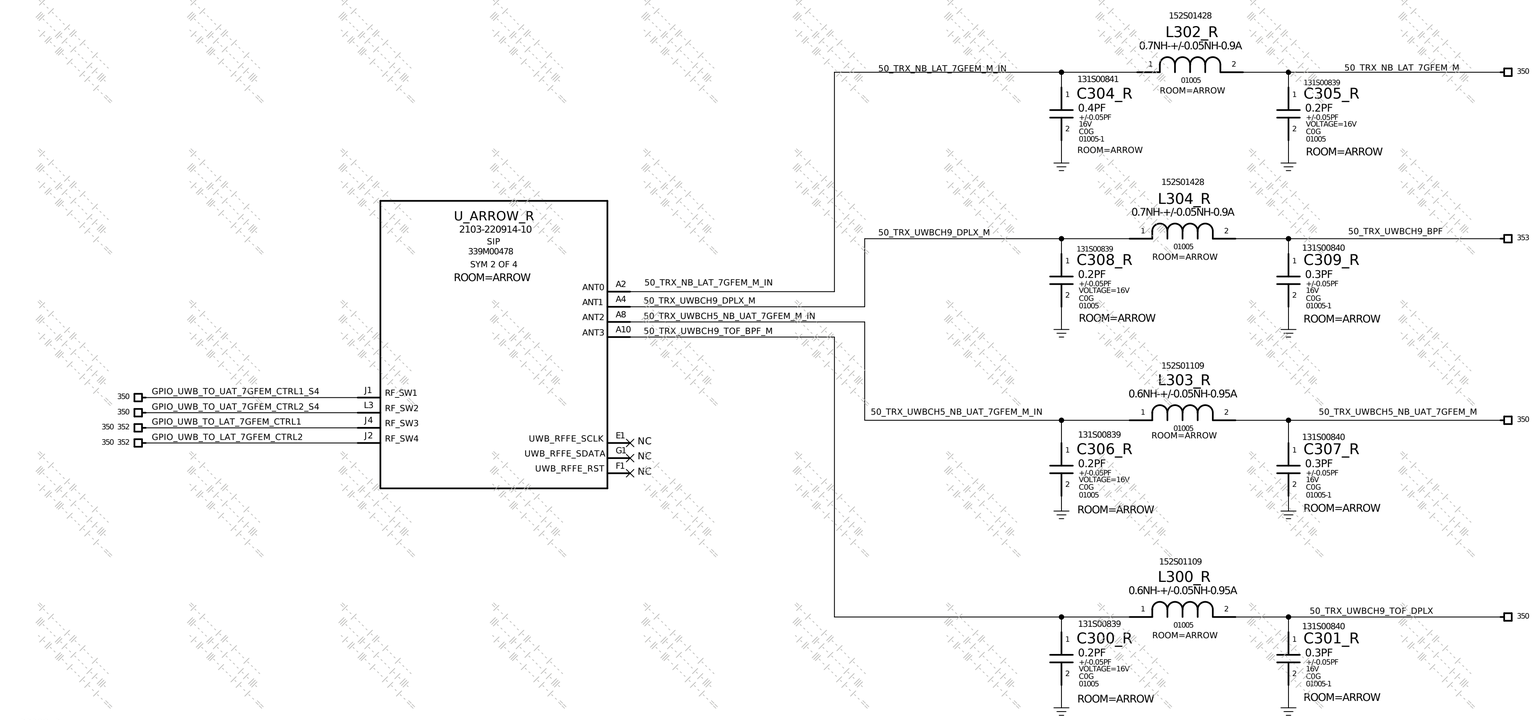

PAGE TITLE	Tanami_FE (4)
Apple Inc.	DRAWING NUMBER 051-12836 SIZE D
	REVISION 4.0.0
	BRANCH proto-2
	PAGE 4 OF 5
	SHEET 36 OF 100

NOTICE OF PROPRIETARY PROPERTY:
THE INFORMATION CONTAINED HEREIN IS THE PROPRIETARY PROPERTY OF APPLE INC.
THE POSESSOR AGREES TO THE FOLLOWING:
I TO MAINTAIN THIS DOCUMENT IN CONFIDENCE
II NOT TO REPRODUCE OR COPY IT
III NOT TO REVEAL OR PUBLISH IT IN WHOLE OR PART
IV ALL RIGHTS RESERVED

FILTERS/MATCHING AND ANTENNA

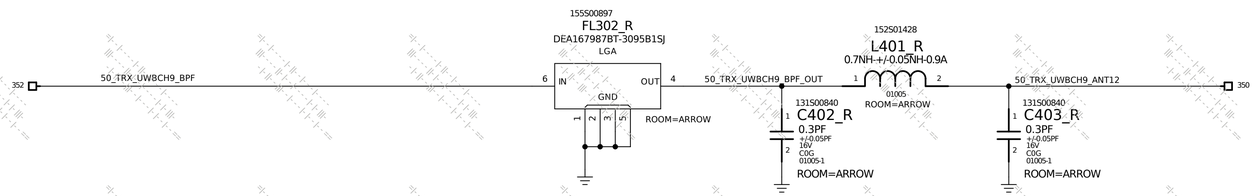

NET NAME	50 OHM TRACE
50_TRX_NB_LAT_7GFEM_M_IN	50 OHM NARROW
50_TRX_NB_LAT_7GFEM_M	50 OHM NARROW
50_TRX_UWBCH9_BPF_M	50 OHM WIDE
50_TRX_UWBCH9_BPF	50 OHM WIDE
50_TRX_UWBCH9_BPF_IN	50 OHM WIDE
50_TRX_UWBCH9_BPF_OUT	50 OHM WIDE
50_TRX_UWBCH9_ANT12	50 OHM WIDE
50_TRX_UWBCH5_NB_UAT_7GFEM_M_IN	50 OHM NARROW
50_TRX_UWBCH5_NB_UAT_7GFEM_M	50 OHM NARROW
50_TRX_UWBCH9_TOF_DPLX_M	50 OHM WIDE
50_TRX_UWBCH9_TOF_DPLX	50 OHM WIDE
50_TRX_WLAN7G_UWBCH5_NB_CH9_TOF_ANT6_M	50 OHM WIDE
50_TRX_WLAN7G_UWBCH5_NB_CH9_TOF_ANT6	50 OHM WIDE

PAGE TITLE: Filter_matching (5)

Apple Inc.

DRAWING NUMBER: 051-12836 SIZE: D

REVISION: 4.0.0

BRANCH: proto-2

PAGE: 5 OF 5

SHEET: 37 OF 100

NOTICE OF PROPRIETARY PROPERTY:
THE INFORMATION CONTAINED HEREIN IS THE PROPRIETARY PROPERTY OF APPLE INC.
THE POSESSOR AGREES TO THE FOLLOWING:
I TO MAINTAIN THIS DOCUMENT IN CONFIDENCE
II NOT TO REPRODUCE OR COPY IT
III NOT TO REVEAL OR PUBLISH IT IN WHOLE OR PART
IV ALL RIGHTS RESERVED

REV	ECN	DESCRIPTION OF REVISION	CK APPD / DATE
4	0073816450	ENGINEERING RELEASED	2025-11-19

V64 HIER_RADIO_BG

WIP

SHEET	PAGE/CSA	CONTENTS	SYNC LABEL	SYNC DATE
1	1	Table of Contents	v64_hier_radio_bg_951-26236_0.79.0	11/18/2025
2	2	PORTS	v64_hier_radio_bg_951-26236_0.79.0	11/18/2025
3	3	PMIC: BUCKs	v64_hier_radio_bg_951-26236_0.79.0	11/18/2025
4	4	PMIC: LDOs	v64_hier_radio_bg_951-26236_0.79.0	11/18/2025
5	5	PMIC: ANALOG, IO	v64_hier_radio_bg_951-26236_0.79.0	11/18/2025
6	6	PMK: CLOCK GEN	v64_hier_radio_bg_951-26236_0.79.0	11/18/2025
7	7	BB: POWER1	v64_hier_radio_bg_951-26236_0.79.0	11/18/2025
8	8	BB: POWER2	v64_hier_radio_bg_951-26236_0.79.0	11/18/2025
9	9	BB: GND	v64_hier_radio_bg_951-26236_0.79.0	11/18/2025
10	10	BB: PCIE & QLINK	v64_hier_radio_bg_951-26236_0.79.0	11/18/2025
11	11	BB: GPIOs	v64_hier_radio_bg_951-26236_0.79.0	11/18/2025
12	12	PSIM	v64_hier_radio_bg_951-26236_0.79.0	11/18/2025
13	13	ESIM	v64_hier_radio_bg_951-26236_0.79.0	11/18/2025
14	14	BLANK	v64_hier_radio_bg_951-26236_0.79.0	11/18/2025
15	15	XCVR POWER	v64_hier_radio_bg_951-26236_0.79.0	11/18/2025
16	16	XCVR DIGITAL & GND	v64_hier_radio_bg_951-26236_0.79.0	11/18/2025
17	17	XCVR RF	v64_hier_radio_bg_951-26236_0.79.0	11/18/2025
18	18	QET0	v64_hier_radio_bg_951-26236_0.79.0	11/18/2025
19	19	QET1	v64_hier_radio_bg_951-26236_0.79.0	11/18/2025
20	20	RF FE SYNONYMS	v64_hier_radio_bg_951-26236_0.79.0	11/18/2025
21	21	LB PAD	v64_hier_radio_bg_951-26236_0.79.0	11/18/2025
22	22	HB PAD RF	v64_hier_radio_bg_951-26236_0.79.0	11/18/2025
23	23	HB PAD GND & RF CONSTRAINTS	v64_hier_radio_bg_951-26236_0.79.0	11/18/2025
24	24	UHB PAD LAT	v64_hier_radio_bg_951-26236_0.79.0	11/18/2025
25	25	LB DSM	v64_hier_radio_bg_951-26236_0.79.0	11/18/2025
26	26	HB TXDSM	v64_hier_radio_bg_951-26236_0.79.0	11/18/2025
27	27	HB TXDSDM GND	v64_hier_radio_bg_951-26236_0.79.0	11/18/2025
28	28	UHB PAD UAT	v64_hier_radio_bg_951-26236_0.79.0	11/18/2025
29	29	MIMO DSM LOWER	v64_hier_radio_bg_951-26236_0.79.0	11/18/2025
30	30	MIMO DSM UPPER	v64_hier_radio_bg_951-26236_0.79.0	11/18/2025
31	31	DISCRETE GNSS	v64_hier_radio_bg_951-26236_0.79.0	11/18/2025
32	32	GNSS_L1	v64_hier_radio_bg_951-26236_0.79.0	11/18/2025
33	33	GNSS_L5	v64_hier_radio_bg_951-26236_0.79.0	11/18/2025
34	34	COUPLER LOWER	v64_hier_radio_bg_951-26236_0.79.0	11/18/2025
35	35	COUPLER UPPER	v64_hier_radio_bg_951-26236_0.79.0	11/18/2025
36	36	BLANK	v64_hier_radio_bg_951-26236_0.79.0	11/18/2025
37	37	BLANK	v64_hier_radio_bg_951-26236_0.79.0	11/18/2025
38	38	LOWER ANTENNA FEEDS_ANT1_3	v64_hier_radio_bg_951-26236_0.79.0	11/18/2025
39	39	LOWER ANTENNA FEEDS_ANT7	v64_hier_radio_bg_951-26236_0.79.0	11/18/2025
40	40	LOWER ANTENNA FEEDS_ANT8	v64_hier_radio_bg_951-26236_0.79.0	11/18/2025

DRAWING TITLE: SCH,MLB,BG,V64

Apple Inc.

DRAWING NUMBER: 051-12836 | SIZE: D

REVISION: 4.0.0

BRANCH: proto-2

PAGE: 1 OF 49

SHEET: 38 OF 100

NOTICE OF PROPRIETARY PROPERTY:

THE INFORMATION CONTAINED HEREIN IS THE PROPRIETARY PROPERTY OF APPLE INC.
THE POSESSOR AGREES TO THE FOLLOWING:
I TO MAINTAIN THIS DOCUMENT IN CONFIDENCE
II NOT TO REPRODUCE OR COPY IT
III NOT TO REVEAL OR PUBLISH IT IN WHOLE OR PART
IV ALL RIGHTS RESERVED

PORTS

CONFIDENTIAL AND PROPRIETARY APPLE SYSTEM DESIGN. FOR REFERENCE ONLY - NOT A CHANGE REQUEST

POWER

- vRPmWDD_MAIN_EAST — IN — 356 357 358 373
- vRPmWDD_MAIN_NORTH — IN — 399
- vRPmWDD_MAIN_NORTH — IN — 371
- vRPmWDD_MAIN_NORTH — IN — 372
- vRPmWDD_BOOST — IN — 373
- vRPmWDD_BOOST — IN — 357 373
- vRPmSRAM_S2 — IN — 384
- vRPmW24_S2_NORTH — IN — 373 384
- vRPmW24_S2_SOUTH — IN — 373
- vRPmW6_ALS_RADIO_S2 — IN — 370 401
- vRPmW6_S8_SOUTH — IN — 373 397
- vRPmW6_S8_V — IN — 373 395 397

CONTROL

- GPIO_NUB_FROM_BB_RESET_DETECT_L — OUT — 364
- GPIO_SEQ_PMU_TO_BBPMU_RESET_L_S2 — IN — 359 401
- GPIO_AP_TO_BB_COREDUMP — IN — 364 401
- GPIO_AOP_TO_GNSS_TIME_MARK — IN — 384 401

SPMI

- SPMI0_HEB_AOP_BI_BB_WLAN_NFC_UWB_DATA_R1 — IO — 364
- SPMI0_HEB_AOP_TO_BB_WLAN_NFC_UWB_CLK — IN — 364 401
- SPMI1_COEX_AOP_BI_BB_WLAN_UWB_DATA_R1 — IO — 364
- SPMI1_COEX_AOP_TO_BB_WLAN_UWB_CLK — IN — 364 401

DOTARA

- GPIO_WLCHGR_TO_BBPMU_CLK_EN — IN — 358 401
- CLK_WLCHGR_FROM_BBPMU_38M4 — OUT — 359 401

NFC

- GPIO_NFC_F_TO_BBPMU_CLK_EN — IN — 358 401
- CLK_BBPMU_TO_NFC_F_38M4 — OUT — 359
- GPIO_NFC_P_TO_BBPMU_CLK_EN — IN — 358 401
- CLK_BBPMU_TO_NFC_P_38M4 — OUT — 359

BB USB

- GPIO_PMU_TO_BB_DEBUG_EN_1VX_S2 — IN — 358 401
- 85_EUSB_BB_BI_PORTC_P — IO — 363
- 85_EUSB_BB_BI_PORTC_N — IO — 363

SWD_JTAG

- SWD_NUB_TO_BB_SWCLK — IN — 363 401
- SWD_NUB_BI_BB_SWDIO — OUT — 363 401

QUIET MODE

- GPIO_AOP_TO_BBPMU_COEX — IN — 358 401

50 OHM

- 50_TRX_MB_HB_ANT1 — IO — ANT1
- 50_TRX_LB_ANT2 — IO — ANT2
- 50_TRX_LB_LMB_MB_HB_WLAN24_ANT3 — IO — ANT3
- 50_TRX_MB_HB_UHB_WLAN24_ANT4 — IO — ANT4
- 50_TRX_UHB_ANT7 — IO — ANT7
- 50_TRX_UHB_ANT8 — IO — ANT8
- 50_TRX_UHB_ANT9 — IO — ANT9
- 50_RX_GNSS_L5_ANT10 — IO — ANT10L
- 50_TRX_LMB_MB_HB_L1_ANT14 — IO — ANT14
- 50_TRX_WLAN_G_BT_ANT3_NPLXR — IO — 391
- 50_TRX_WLAN_G_BT_ANT4_NPLXR — IO — 395

UAT/LAT SAWTOOTH

- SAWTOOTH_UAT_A — OUT — 397 401
- SAWTOOTH_UAT_B — OUT — 397 401
- SAWTOOTH_UAT_C — OUT — 397 401
- SAWTOOTH_LAT_A — OUT — 397 401
- SAWTOOTH_LAT_B — OUT — 397 401

GNSS

- GPIO_AOP_TO_GNSS_ENABLE — IN — 384 401
- GPIO_AOP_TO_GNSS_CS_L — IN — 384 401
- SPI1_AOP_TO_GNSS_UWB_SCLK — IN — 384
- SPI1_AOP_TO_GNSS_UWB_PICO — IN — 384 401
- SPI1_AOP_FROM_GNSS_UWB_POCI — OUT — 384 401
- GPIO_AOP_FROM_GNSS_HOST_REQ — OUT — 384
- CLK_GPIO_PMU_TO_WLAN_UWB_GNSS_32K_S4 — IN — 384 401

SIM1

- IO_BB_BI_SIM0_DATA — IO — 358 401
- IO_BB_TO_SIM0_CLK — IN — 358 401
- IO_BB_TO_SIM0_RESET_L — IN — 358 401
- PPVRP_SIM0 — OUT — 357

- IO_BB_FROM_PSIM_DETECT — IN — 365

PCIE

- 85_PCIE_GP1_AP_TO_BB_REFCLK_P — IN — 363 401
- 85_PCIE_GP1_AP_TO_BB_REFCLK_N — IN — 363 401
- 85_PCIE_GP1_AP_TO_BB_TX_P — IN — 363
- 85_PCIE_GP1_AP_TO_BB_TX_N — IN — 363
- 85_PCIE_GP1_AP_FROM_BB_RX_P — OUT — 363
- 85_PCIE_GP1_AP_FROM_BB_RX_N — OUT — 363
- PCIE_GP1_AP_BI_BB_CLKREQ_L — IO — 364
- PCIE_GP1_AP_TO_BB_PERST_L — IN — 364 401
- GPIO_PMU_FROM_BB_PCIE_HOST_WAKE_L_S2 — OUT — 364 401

PAGE TITLE	PORTS (2)
Apple Inc.	DRAWING NUMBER 051-12836 — SIZE D
	REVISION 4.0.0
	BRANCH proto-2
	PAGE 2 OF 49
	SHEET 39 OF 100

NOTICE OF PROPRIETARY PROPERTY:
THE INFORMATION CONTAINED HEREIN IS THE PROPRIETARY PROPERTY OF APPLE INC.
THE POSESSOR AGREES TO THE FOLLOWING:
I TO MAINTAIN THIS DOCUMENT IN CONFIDENCE
II NOT TO REPRODUCE OR COPY IT
III NOT TO REVEAL OR PUBLISH IT IN WHOLE OR PART
IV ALL RIGHTS RESERVED

BB PMU: SMPS

CONFIDENTIAL AND PROPRIETARY APPLE SYSTEM DESIGN. FOR REFERENCE ONLY - NOT A CHANGE REQUEST

SMPS INPUT CAPS

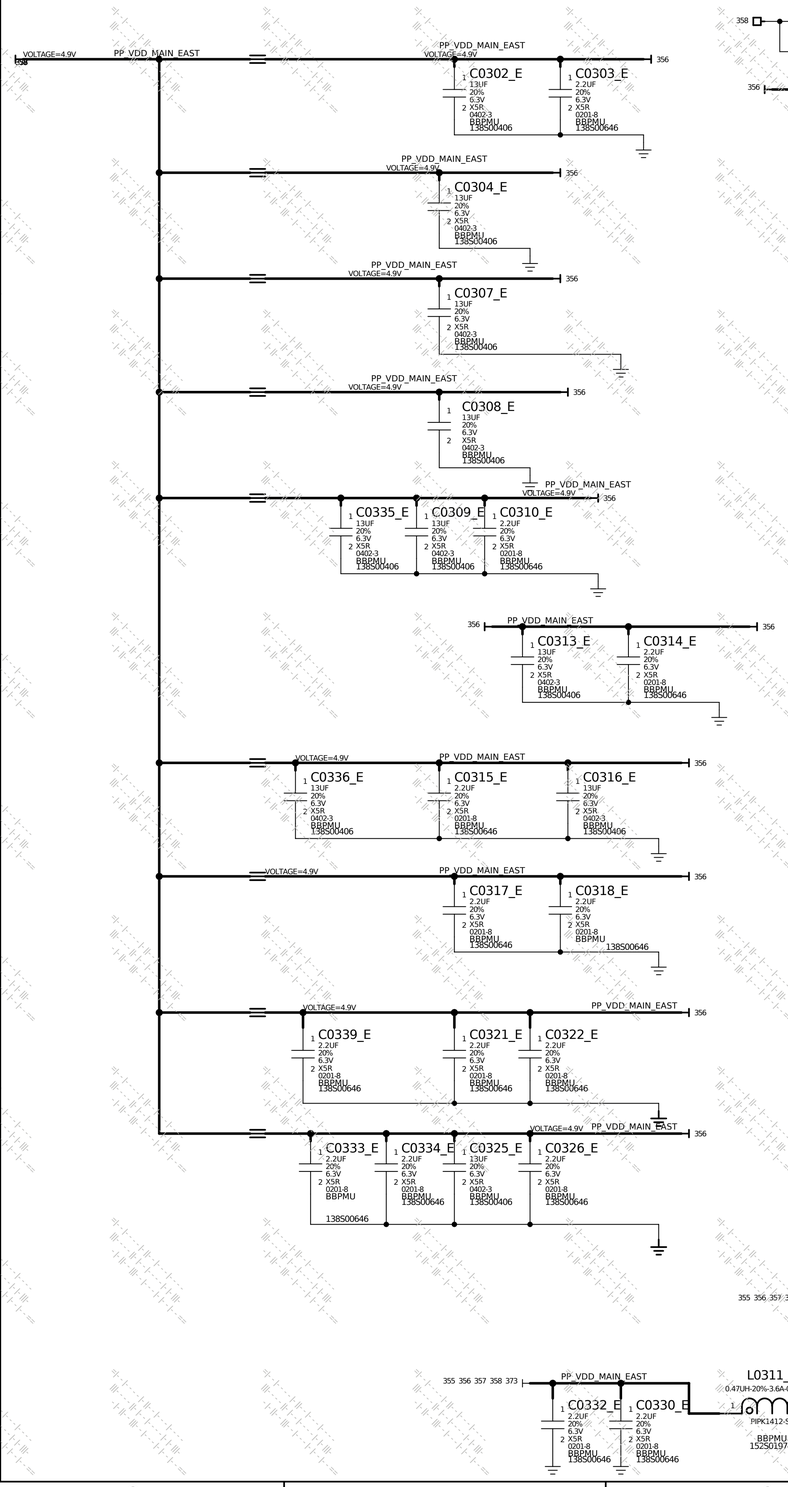

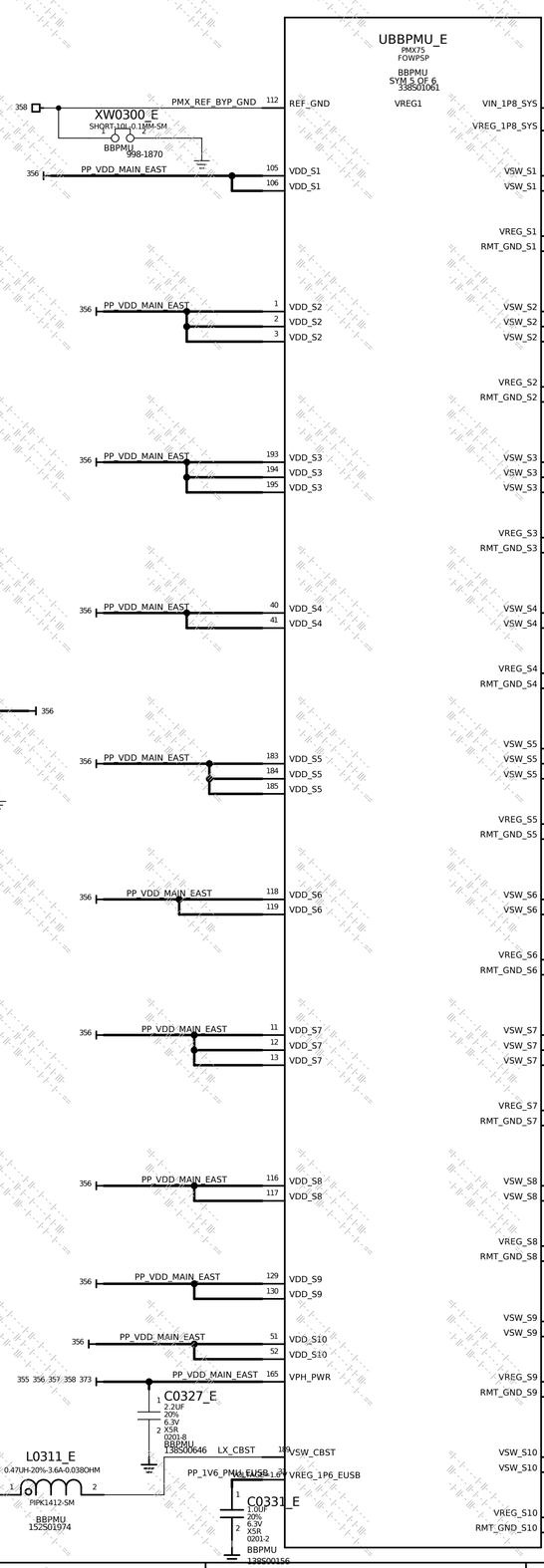

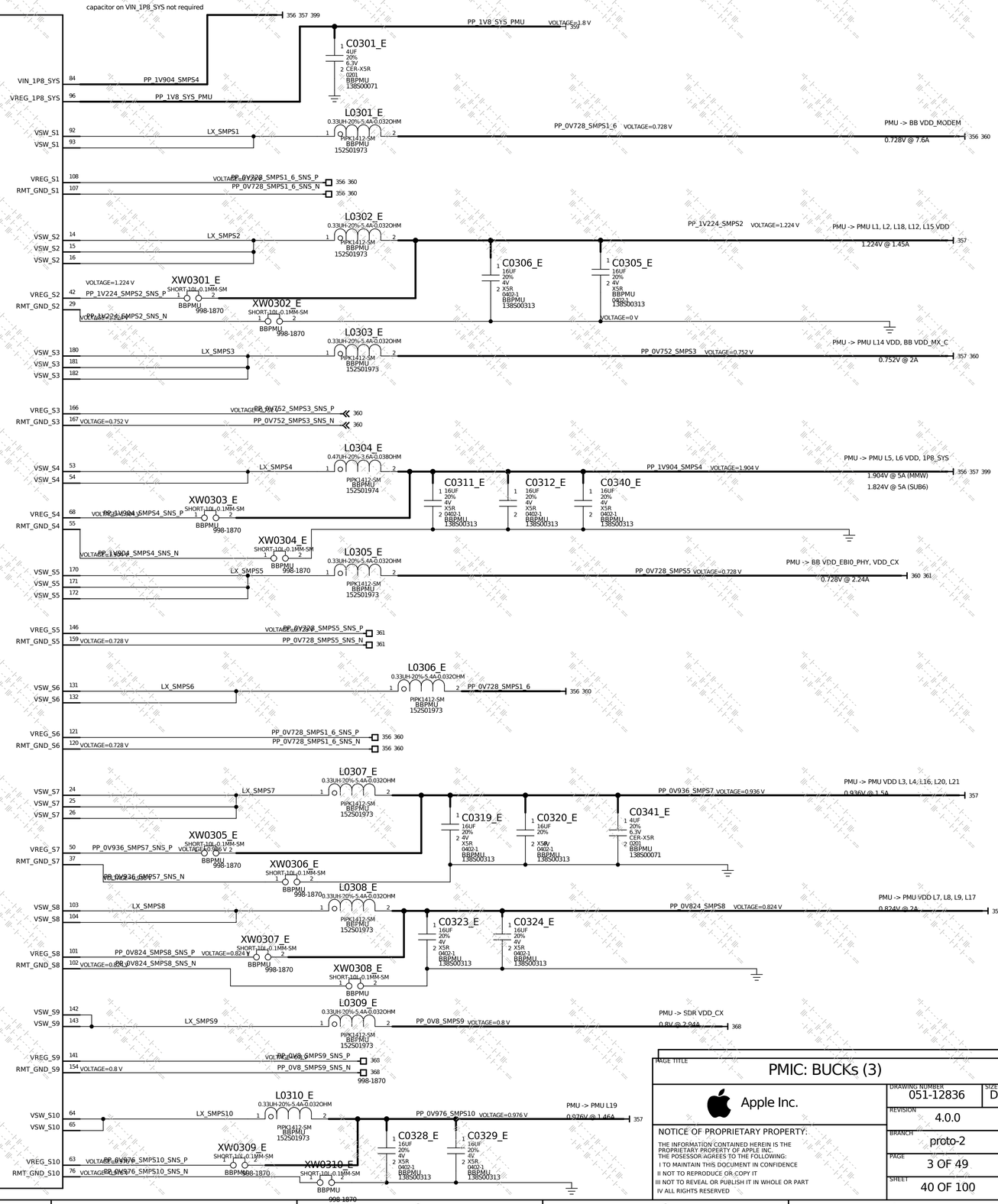

PAGE TITLE: PMIC: BUCKs (3)

Apple Inc.

DRAWING NUMBER	051-12836
SIZE	D
REVISION	4.0.0
BRANCH	proto-2
PAGE	3 OF 49
SHEET	40 OF 100

NOTICE OF PROPRIETARY PROPERTY:
THE INFORMATION CONTAINED HEREIN IS THE PROPRIETARY PROPERTY OF APPLE INC.
THE POSESSOR AGREES TO THE FOLLOWING:
I TO MAINTAIN THIS DOCUMENT IN CONFIDENCE
II NOT TO REPRODUCE OR COPY IT
III NOT TO REVEAL OR PUBLISH IT IN WHOLE OR PART
IV ALL RIGHTS RESERVED

BB PMU: LDOS

CONFIDENTIAL AND PROPRIETARY APPLE SYSTEM DESIGN. FOR REFERENCE ONLY - NOT A CHANGE REQUEST

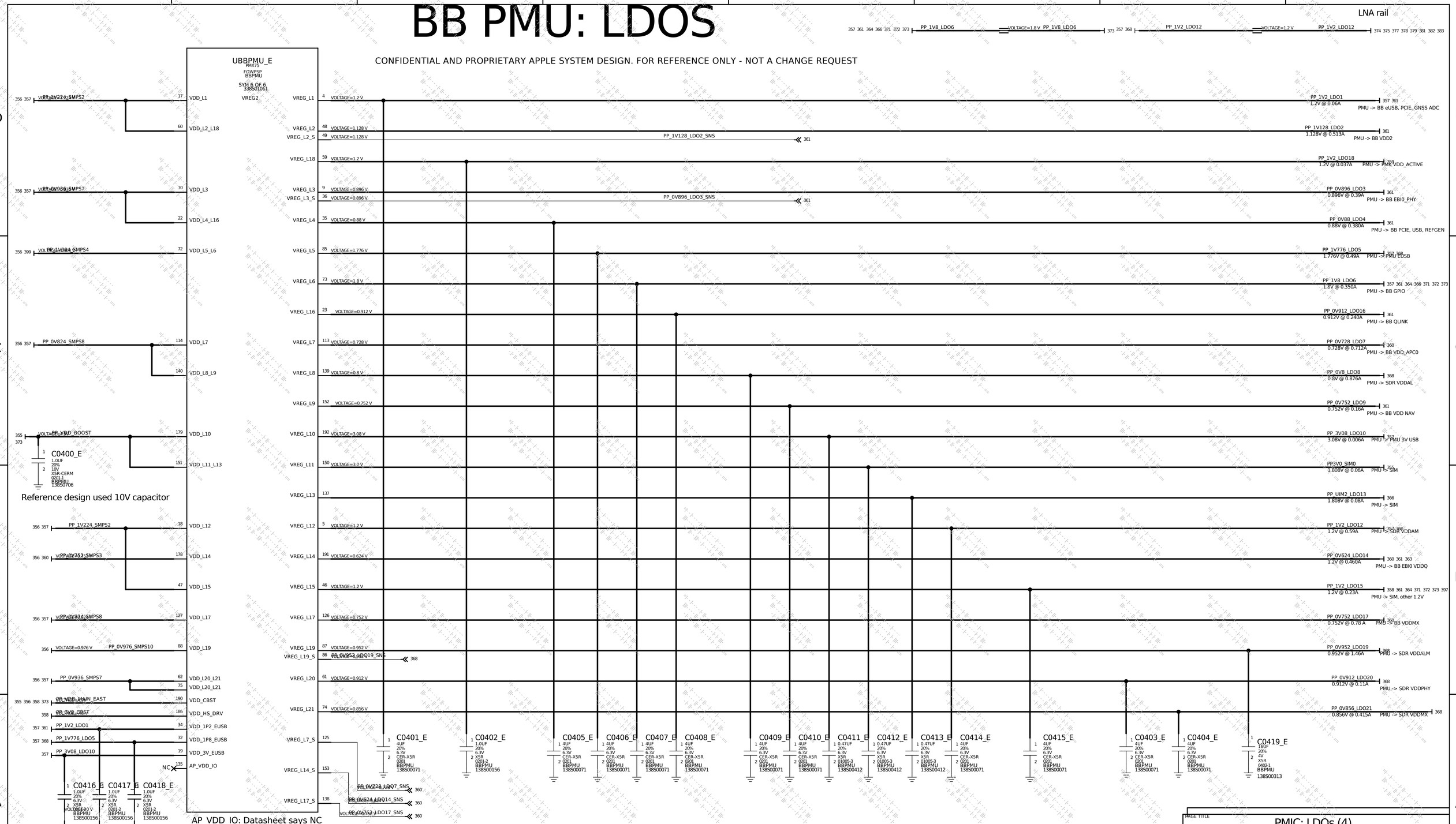

LDO capacitance table (* is remote sense)
N1200 (L1, L4, L8, L9, L12, L15, L16, L20, L21) 4.7uF min, 24 uF max
N1200 (L2*) 2x10uF or 4x4.7uF min, 24 uF max.
N1200FT (L3*, L14*) 2x10uF or 4x4.7uF min, 44uF max.
N2000 (L7*, L17*, L19*) 2x10uF or 4x4.7uF min, 44 uF max.
N300 (L18) 1uF min, 24uF max.
LVP600 (L5, L6) 4.7uF min, 23.5uF max.
MVP150 (L10, L11, L13) 0.47uF min, 5uF max.

Reference design note: for LDO where remote sensing is utilized, sense line should be connected directly to bulk output cap placed by the load, with no output cap placed locally by the PMIC

PAGE TITLE
PMIC: LDOs (4)

Apple Inc.

NOTICE OF PROPRIETARY PROPERTY:
THE INFORMATION CONTAINED HEREIN IS THE PROPRIETARY PROPERTY OF APPLE INC.
THE POSESSOR AGREES TO THE FOLLOWING:
I TO MAINTAIN THIS DOCUMENT IN CONFIDENCE
II NOT TO REPRODUCE OR COPY IT
III NOT TO REVEAL OR PUBLISH IT IN WHOLE OR PART
IV ALL RIGHTS RESERVED

DRAWING NUMBER 051-12836
SIZE D
REVISION 4.0.0
BRANCH proto-2
PAGE 4 OF 49
SHEET 41 OF 100

BB PMU: ANALOG, IO

BOARD_ID	APN	R502_E	MLB/RADIO_DEV	HEX
0.05V-0.15V	118S00289	5.6K	PROTO0 MAIN/DEV0	0X01
0.15V-0.25V	118S00268	12.0K	PROTO1 MAIN/DEV0	0X02
0.25V-0.35V	118S00248	19.1K	PROTO1.5 MAIN/DEV1	0X03
0.35V-0.45V	118S00290	27.0K	PROTO2 MAIN/DEV1	0X04
0.45V-0.55V	118S00317	36.5K	EVT/DEV2	0X05
0.55V-0.65V	118S00271	47.5K	CARRIER/DEV3	0X06
0.65V-0.75V	118S00310	60.4K	DVT/DEV4	0X07
0.75V-0.85V	118S00345	75.0K	PVT/DEV5	0X08
0.85V-0.95V	118S00348	93.1K	SPARE	0X09
0.95V-1.05V	118S00432	115K	EVT_3V	0X0A
1.05V-1.15V	118S00433	143K	SPARE	0X0B
1.15V-1.25V	TBD	TBD	SPARE	SPARE

PLATFORM_ID	APN	R503_E	MLB/RADIO_DEV	HEX
0.05V-0.15V	118S00289	5.6K	RADIO_DEV	0X01
0.15V-0.25V	118S00268	12.0K		0X02
0.25V-0.35V	118S00248	19.1K		0X03
0.35V-0.45V	118S00290	27.0K	MAV25.0	0X04
0.45V-0.55V	118S00317	36.5K	MAV25.1	0X05
0.55V-0.65V	118S00271	47.5K	MAV25.2	0X06
0.65V-0.75V	118S00310	60.4K	MAV25.3	0X07
0.75V-0.85V	118S00345	75.0K		0X08
0.85V-0.95V	118S00348	93.1K		0X09
0.95V-1.05V	118S00432	115K		0X0A
1.05V-1.15V	118S00433	143K		0X0B
1.15V-1.25V	118S00243	178K		0X0C
1.25V-1.35V	118S00434	226K		0X0D
1.35V-1.45V	118S00435	294K		0X0E
1.45V-1.55V	118S00436	402K		0X0F

SKU_ID	APN	R501_E	MLB/RADIO_DEV	HEX
0.05V-0.15V	118S00289	5.6K	WW+G+MMW	0X01
0.15V-0.25V	118S00268	12.0K	WW+G	0X02
0.25V-0.35V	118S00248	19.1K	RS+G	0X03
0.35V-0.45V	118S00290	27.0K	RS	0X04
0.45V-0.55V	118S00317	36.5K	RS-CHN	0X05
0.55V-0.65V	118S00271	47.5K	SPARE	0X06
0.65V-0.75V	118S00310	60.4K	SPARE	0X07
0.75V-0.85V	118S00345	75.0K	SPARE	0X08
0.85V-0.95V	118S00348	93.1K	SPARE	0X09
0.95V-1.05V	118S00432	115K	SPARE	0X0A
1.05V-1.15V	118S00433	143K	SPARE	0X0B
1.15V-1.25V	118S00243	178K	SPARE	0X0C

SIM_SKU_ID	APN	R504_E	MLB/RADIO_DEV	HEX
0.05V-0.15V	118S00289	5.6K	PSIM1+PSIM2 (1.8V)	0X01
0.15V-0.25V	118S00268	12.0K	PSIM1+PSIM2 (3V)	0X02
0.25V-0.35V	118S00248	19.1K	RSVD	0X03
0.35V-0.45V	118S00290	27.0K	RSVD	0X04
0.45V-0.55V	118S00317	36.5K	RSVD	0X05
0.55V-0.65V	118S00271	47.5K	RSVD	0X06
0.66V-0.75V	118S00310	60.4K	PSIM1+LOONIE	0x07
0.76V-0.85V	118S00345	75.0K	LOONIE_ONLY	0x08
0.85V-0.95V	118S00348	93.1K	LETO (3V)	0x09
0.95V-1.05V	118S00432	115K	LETO	0x0A

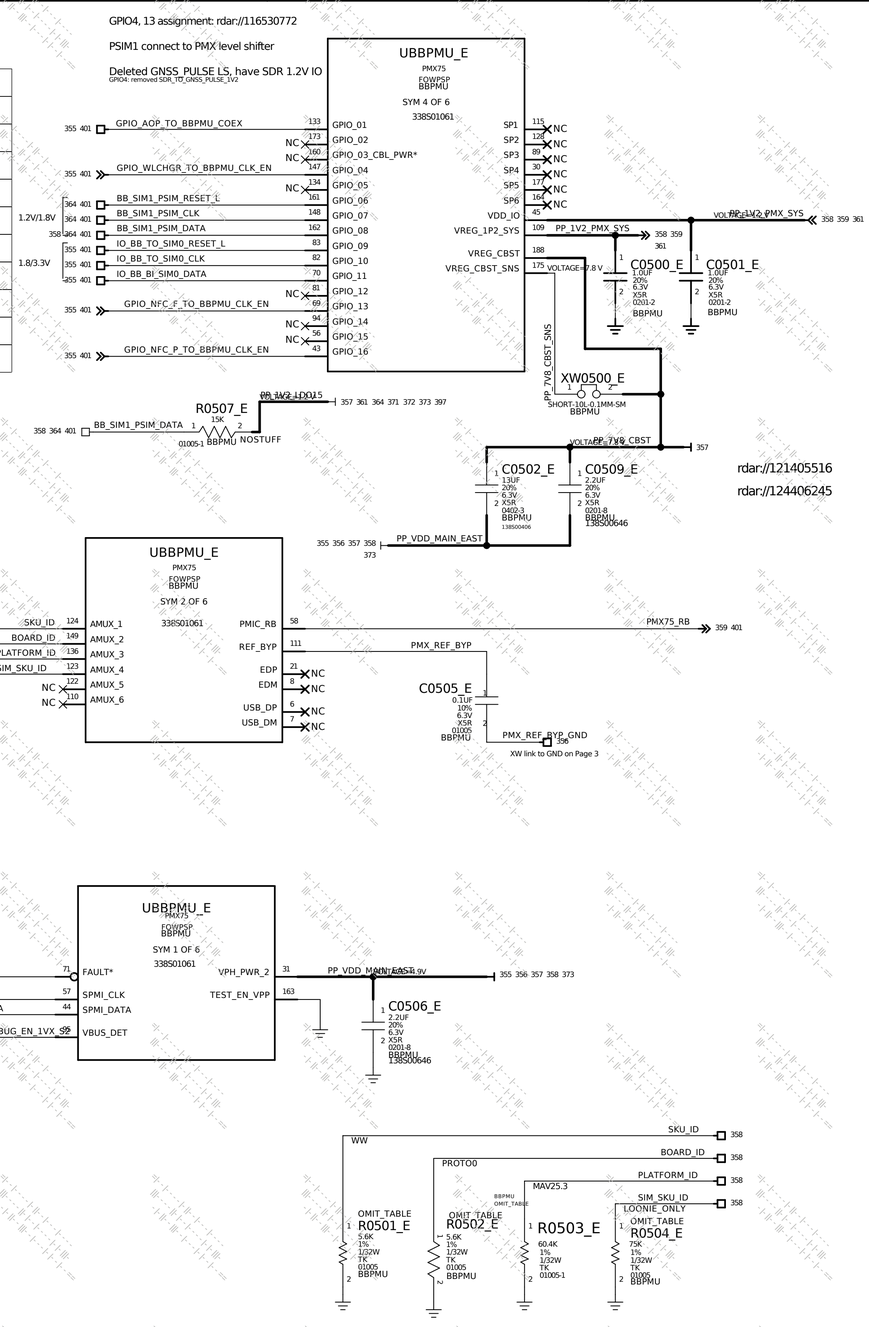

CONFIDENTIAL AND PROPRIETARY APPLE SYSTEM DESIGN. FOR REFERENCE ONLY - NOT A CHANGE REQUEST

PAGE TITLE: PMIC: ANALOG, IO (5)

Apple Inc.

DRAWING NUMBER: 051-12836 | SIZE: D

REVISION: 4.0.0

BRANCH: proto-2

PAGE: 5 OF 49

SHEET: 42 OF 100

NOTICE OF PROPRIETARY PROPERTY:
THE INFORMATION CONTAINED HEREIN IS THE PROPRIETARY PROPERTY OF APPLE INC.
THE POSESSOR AGREES TO THE FOLLOWING:
I TO MAINTAIN THIS DOCUMENT IN CONFIDENCE
II NOT TO REPRODUCE OR COPY IT
III NOT TO REVEAL OR PUBLISH IT IN WHOLE OR PART
IV ALL RIGHTS RESERVED

BB PMU: CLOCK DRIVER

CONFIDENTIAL AND PROPRIETARY APPLE SYSTEM DESIGN. FOR REFERENCE ONLY - NOT A CHANGE REQUEST

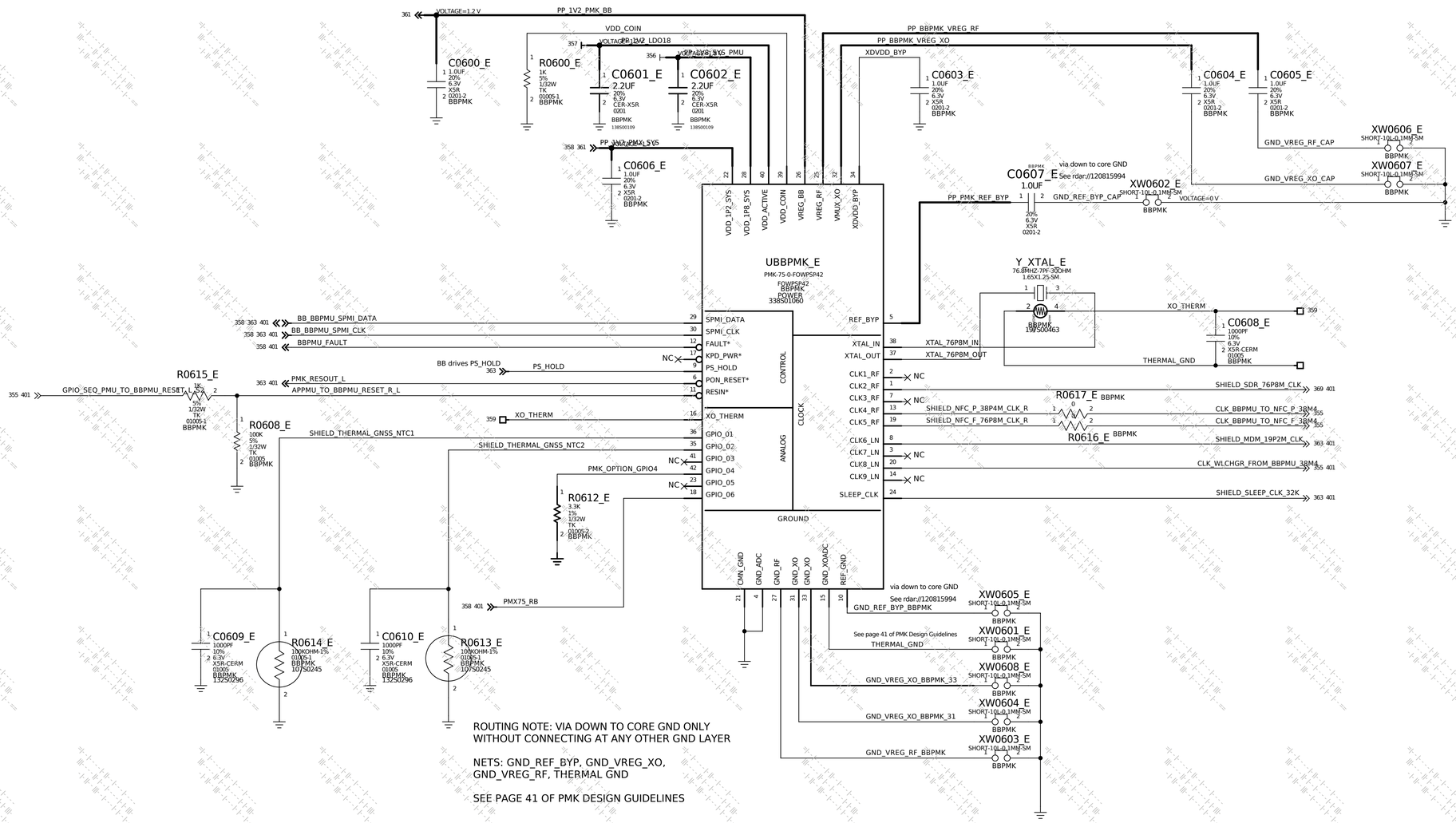

ROUTING NOTE: VIA DOWN TO CORE GND ONLY
WITHOUT CONNECTING AT ANY OTHER GND LAYER

NETS: GND_REF_BYP, GND_VREG_XO,
GND_VREG_RF, THERMAL GND

SEE PAGE 41 OF PMK DESIGN GUIDELINES

XTAL ALT TABLES

ALTERNATE PART NO.	PRIMARY PART NO.	REFERENCE DESIGNATORS	COMMENT
197S00308	197S00463	Y_XTAL_E	KDS,76.8MHZ,7PF,1612
197S00309	197S00463	Y_XTAL_E	NDK,76.8MHZ,7PF,1612
197S00369	197S00463	Y_XTAL_E	KYO,76.8MHZ,7PF,1612

NTC ALT TABLES

ALTERNATE PART NO.	PRIMARY PART NO.	REFERENCE DESIGNATORS	COMMENT
107S00539	107S0245	ALL	TDK,THERM,NTC,100K,1%

PAGE TITLE: PMK: CLOCK GEN (6)

Apple Inc.

DRAWING NUMBER: 051-12836 SIZE: D

REVISION: 4.0.0

BRANCH: proto-2

PAGE: 6 OF 49

SHEET: 43 OF 100

NOTICE OF PROPRIETARY PROPERTY:
THE INFORMATION CONTAINED HEREIN IS THE PROPRIETARY PROPERTY OF APPLE INC.
THE POSESSOR AGREES TO THE FOLLOWING:
I TO MAINTAIN THIS DOCUMENT IN CONFIDENCE
II NOT TO REPRODUCE OR COPY IT
III NOT TO REVEAL OR PUBLISH IT IN WHOLE OR PART
IV ALL RIGHTS RESERVED

BB: PDN

CONFIDENTIAL AND PROPRIETARY APPLE SYSTEM DESIGN. FOR REFERENCE ONLY - NOT A CHANGE REQUEST

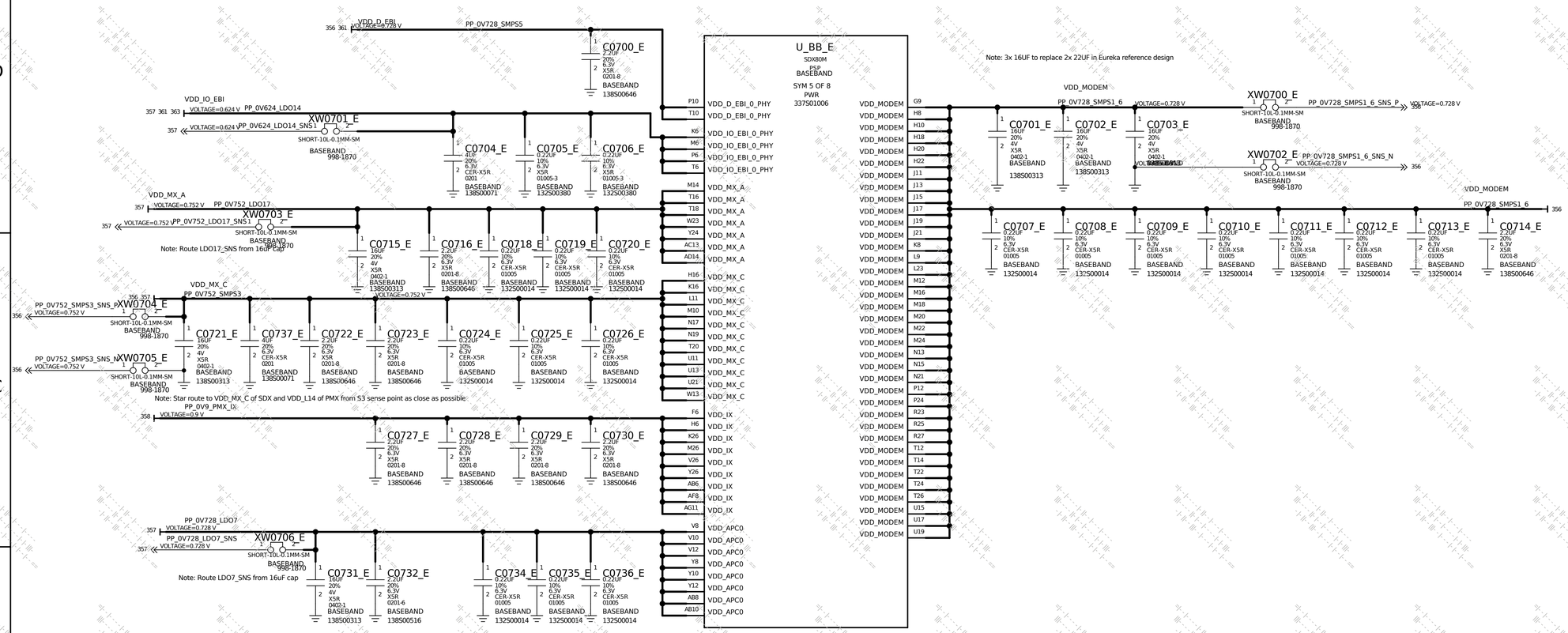

PAGE TITLE	BB: POWER1 (7)
Apple Inc.	DRAWING NUMBER 051-12836 · SIZE D
	REVISION 4.0.0
	BRANCH proto-2
	PAGE 7 OF 49
	SHEET 44 OF 100

NOTICE OF PROPRIETARY PROPERTY:
THE INFORMATION CONTAINED HEREIN IS THE PROPRIETARY PROPERTY OF APPLE INC.
THE POSESSOR AGREES TO THE FOLLOWING:
I TO MAINTAIN THIS DOCUMENT IN CONFIDENCE
II NOT TO REPRODUCE OR COPY IT
III NOT TO REVEAL OR PUBLISH IT IN WHOLE OR PART
IV ALL RIGHTS RESERVED

BB: PDN

CONFIDENTIAL AND PROPRIETARY APPLE SYSTEM DESIGN. FOR REFERENCE ONLY - NOT A CHANGE REQUEST

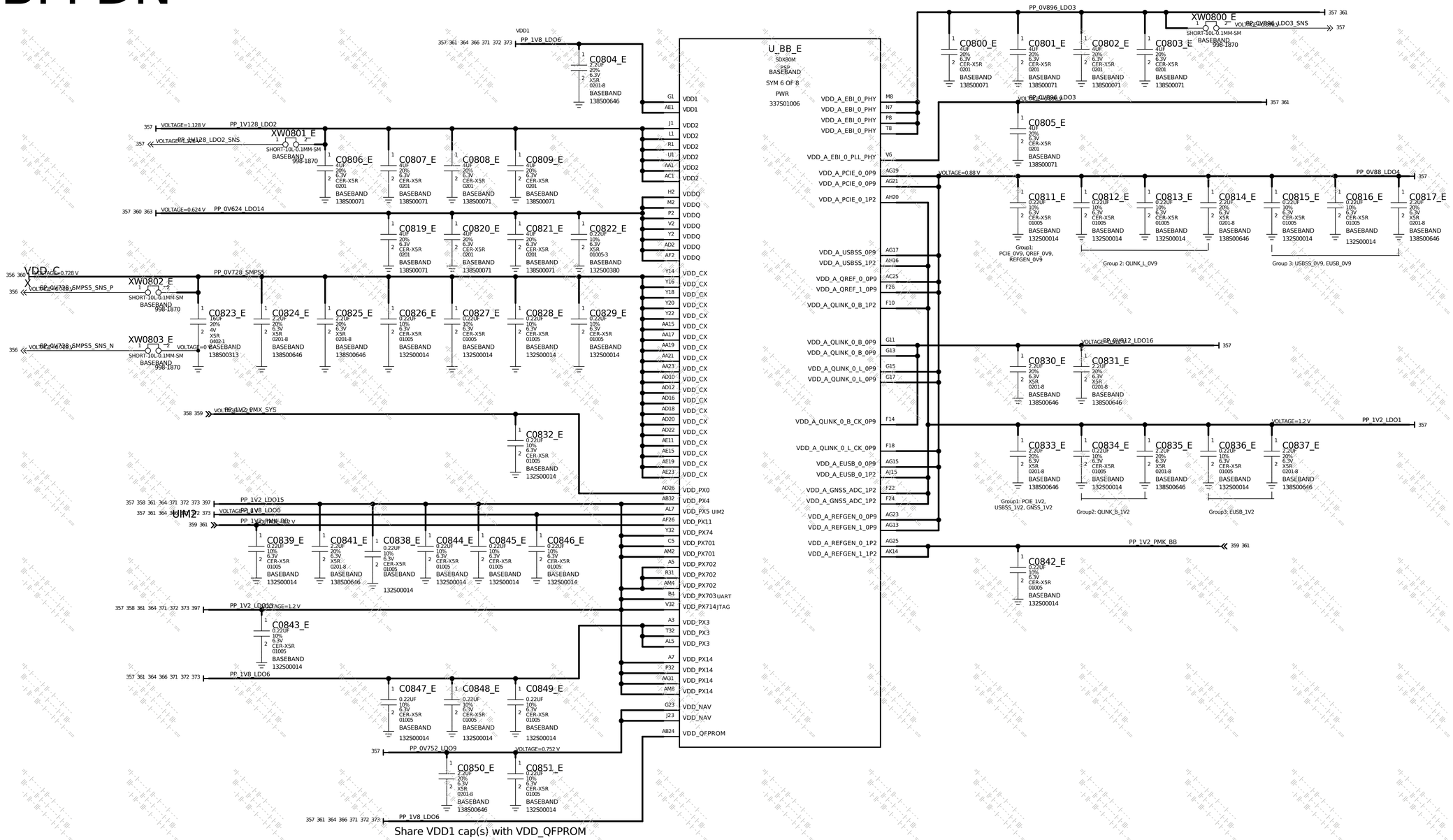

PAGE TITLE	BB: POWER2 (8)
Apple Inc.	
DRAWING NUMBER	051-12836
SIZE	D
REVISION	4.0.0
BRANCH	proto-2
PAGE	8 OF 49
SHEET	45 OF 100

NOTICE OF PROPRIETARY PROPERTY:
THE INFORMATION CONTAINED HEREIN IS THE PROPRIETARY PROPERTY OF APPLE INC.
THE POSESSOR AGREES TO THE FOLLOWING:
I TO MAINTAIN THIS DOCUMENT IN CONFIDENCE
II NOT TO REPRODUCE OR COPY IT
III NOT TO REVEAL OR PUBLISH IT IN WHOLE OR PART
IV ALL RIGHTS RESERVED

BB: GND

CONFIDENTIAL AND PROPRIETARY APPLE SYSTEM DESIGN. FOR REFERENCE ONLY - NOT A CHANGE REQUEST

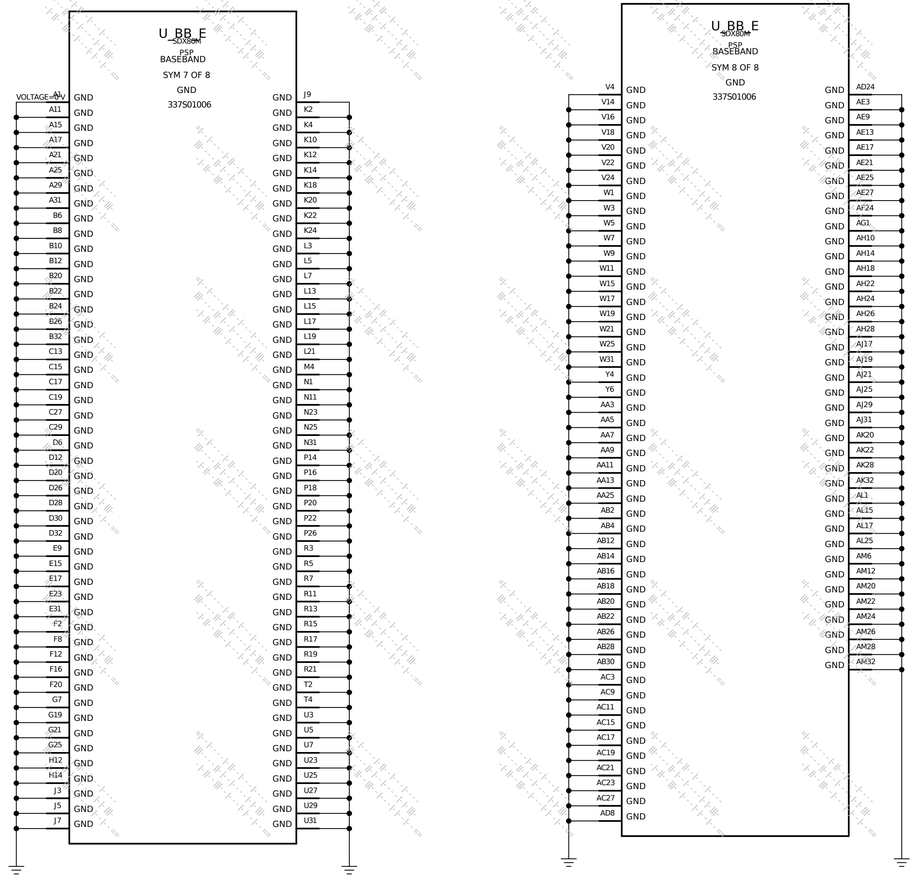

PAGE TITLE
BB: GND (9)

Apple Inc.

DRAWING NUMBER 051-12836
SIZE D
REVISION 4.0.0
BRANCH proto-2
PAGE 9 OF 49
SHEET 46 OF 100

NOTICE OF PROPRIETARY PROPERTY:
THE INFORMATION CONTAINED HEREIN IS THE PROPRIETARY PROPERTY OF APPLE INC.
THE POSESSOR AGREES TO THE FOLLOWING:
I TO MAINTAIN THIS DOCUMENT IN CONFIDENCE
II NOT TO REPRODUCE OR COPY IT
III NOT TO REVEAL OR PUBLISH IT IN WHOLE OR PART
IV ALL RIGHTS RESERVED

BB:QLINK,PCIE SERDES

CONFIDENTIAL AND PROPRIETARY APPLE SYSTEM DESIGN. FOR REFERENCE ONLY - NOT A CHANGE REQUEST

NOTE: QLINK DL0 NETS HAVE PP FOR DEBUG ON BOTH _B AND _L

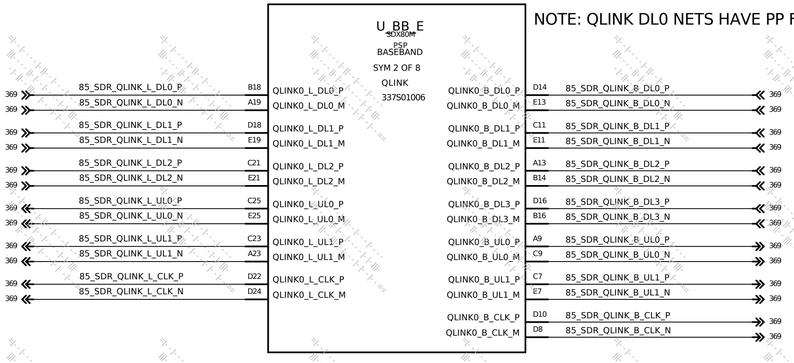

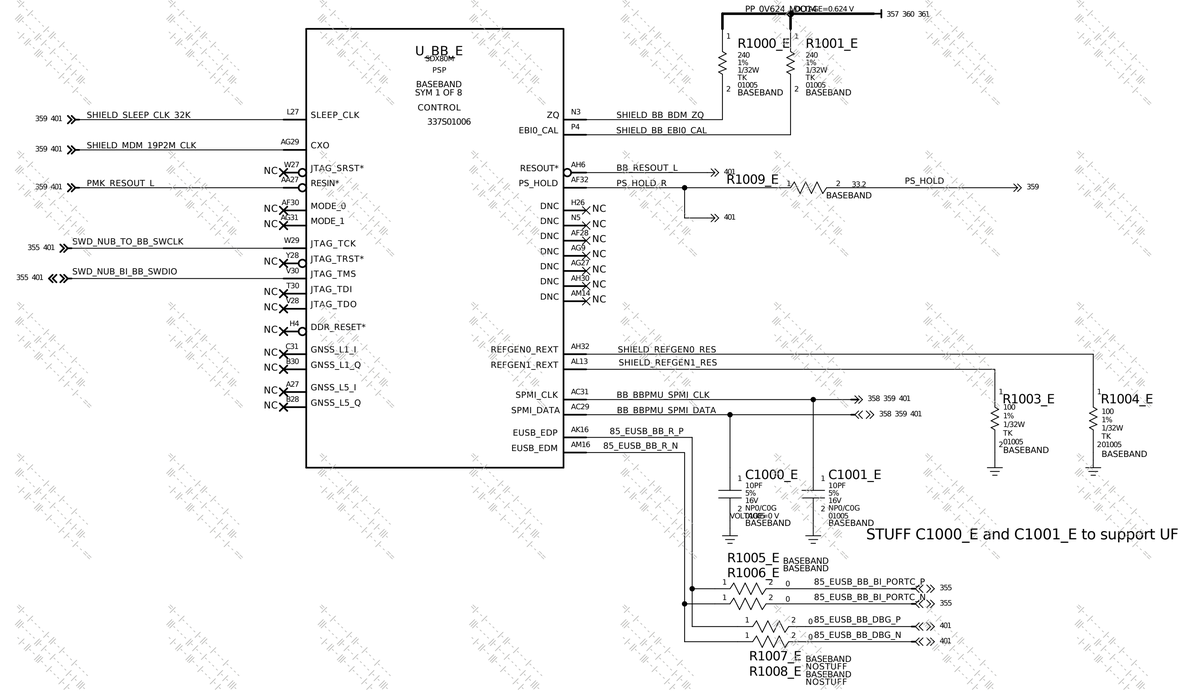

STUFF C1000_E and C1001_E to support UF

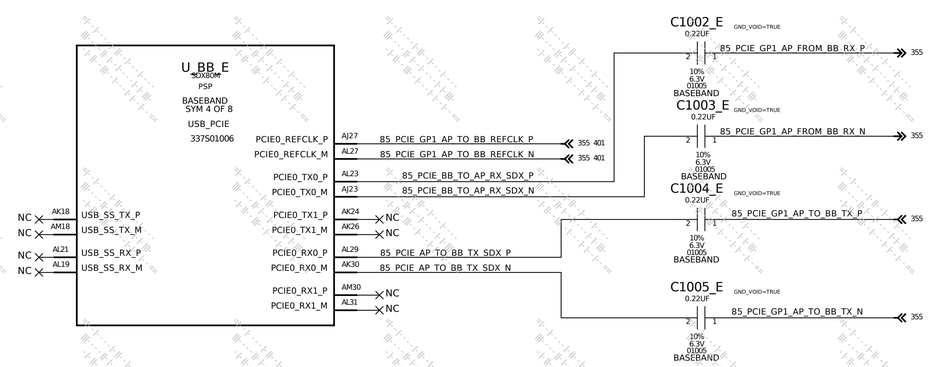

PAGE TITLE	BB: PCIE & QLINK (10)
DRAWING NUMBER	051-12836
SIZE	D
REVISION	4.0.0
BRANCH	proto-2
PAGE	10 OF 49
SHEET	47 OF 100

Apple Inc.

NOTICE OF PROPRIETARY PROPERTY:
THE INFORMATION CONTAINED HEREIN IS THE PROPRIETARY PROPERTY OF APPLE INC.
THE POSESSOR AGREES TO THE FOLLOWING:
I TO MAINTAIN THIS DOCUMENT IN CONFIDENCE
II NOT TO REPRODUCE OR COPY IT
III NOT TO REVEAL OR PUBLISH IT IN WHOLE OR PART
IV ALL RIGHTS RESERVED

BB:GPIOS, EEPROM

CONFIDENTIAL AND PROPRIETARY APPLE SYSTEM DESIGN. FOR REFERENCE ONLY - NOT A CHANGE REQUEST

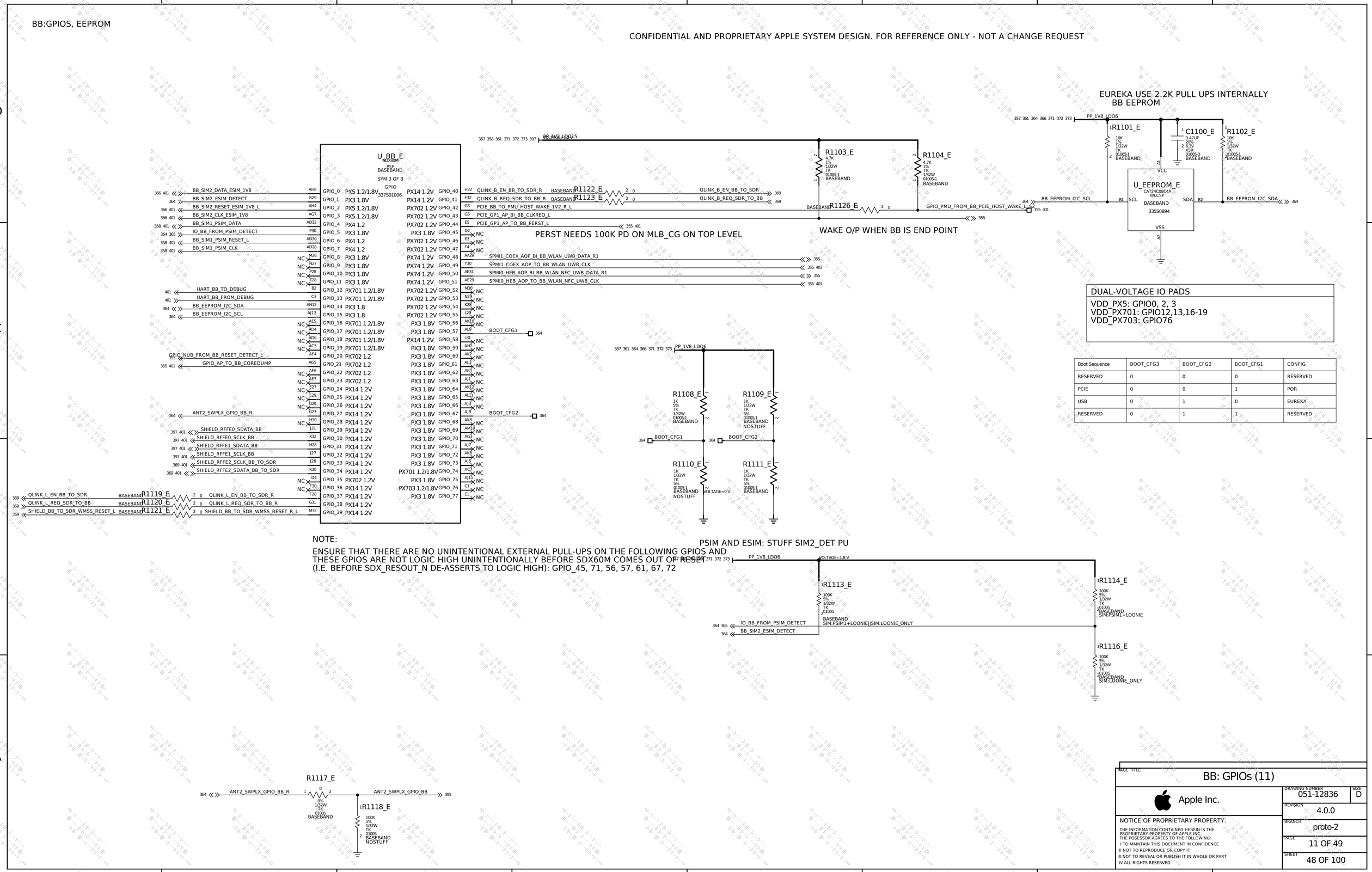

Boot Sequence	BOOT_CFG3	BOOT_CFG2	BOOT_CFG1	CONFIG
RESERVED	0	0	0	RESERVED
PCIE	0	0	1	POR
USB	0	1	0	EUREKA
RESERVED	0	1	1	RESERVED

PAGE TITLE: BB: GPIOs (11)

Apple Inc.

DRAWING NUMBER: 051-12836 SIZE: D

REVISION: 4.0.0

BRANCH: proto-2

PAGE: 11 OF 49

SHEET: 48 OF 100

NOTICE OF PROPRIETARY PROPERTY:
THE INFORMATION CONTAINED HEREIN IS THE PROPRIETARY PROPERTY OF APPLE INC.
THE POSESSOR AGREES TO THE FOLLOWING:
I TO MAINTAIN THIS DOCUMENT IN CONFIDENCE
II NOT TO REPRODUCE OR COPY IT
III NOT TO REVEAL OR PUBLISH IT IN WHOLE OR PART
IV ALL RIGHTS RESERVED

DUAL PSIM

No more dual PSIM starting in V64 P2

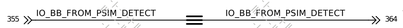

CONFIDENTIAL AND PROPRIETARY APPLE SYSTEM DESIGN. FOR REFERENCE ONLY - NOT A CHANGE REQUEST

PAGE TITLE
PSIM (12)

Apple Inc.

DRAWING NUMBER 051-12836
SIZE D
REVISION 4.0.0
BRANCH proto-2
PAGE 12 OF 49
SHEET 49 OF 100

NOTICE OF PROPRIETARY PROPERTY:
THE INFORMATION CONTAINED HEREIN IS THE PROPRIETARY PROPERTY OF APPLE INC.
THE POSESSOR AGREES TO THE FOLLOWING:
I TO MAINTAIN THIS DOCUMENT IN CONFIDENCE
II NOT TO REPRODUCE OR COPY IT
III NOT TO REVEAL OR PUBLISH IT IN WHOLE OR PART
IV ALL RIGHTS RESERVED

ESIM

NOTE: Both APN have internal 20kR
PU on DATA
311S00444 has PD for SHUTDOWN

LOAD SWITCH ALT TABLE

ALTERNATE PART NO.	PRIMARY PART NO.	REFERENCE DESIGNATORS
353S04417	353S02276	U_SIMPT_E

NOTE: 353S02276 has internal PD on EN
353S00999 does not have internal PD

ESIM OMIT TABLE

PART NUMBER	BOMOPTION	REFERENCE DESIGNATORS	QTY	DESCRIPTION	
337S01044	SIM:LOONIE_ONLY&&PLATFORM:MAV25.3&&BOARD_REV:PROTO0&&(RF_SKU:WW+G||RF_SKU:WW+G+MMW)	U_ESIM_E	1	IC,VESTA,A0,HAZEL PROD2-CN-BOOT,WLCSP16	P0 US/WW ATT
998-38796	(SIM:LOONIE_ONLY&&PLATFORM:MAV25.3&&BOARD_REV:PROTO1&&(RF_SKU:WW+G||RF_SKU:WW+G+MMW))||(SIM:PSIM1+LOONIE&&PLATFORM:MAV25.3&&BOARD_REV:PROTO1&&RF_SKU:RS+G)	U_ESIM_E	1	IC,VESTA,A1,DEV1-NC,WLCSP16	P1 US/WW/ROW
998-38797	SIM:PSIM1+LOONIE&&PLATFORM:MAV25.3&&BOARD_REV:PROTO1&&RF_SKU:RS-CHN	U_ESIM_E	1	IC,VESTA,A1,DEV1-CN2,WLCSP16	P1 CN
998-39378	(SIM:LOONIE_ONLY&&PLATFORM:MAV25.3&&BOARD_REV:PROTO2&&(RF_SKU:WW+G||RF_SKU:WW+G+MMW))||(SIM:PSIM1+LOONIE&&PLATFORM:MAV25.3&&BOARD_REV:PROTO2&&RF_SKU:RS+G)	U_ESIM_E	1	IC,VESTA,A1,DEV2-NC,WLCSP16	P2 US/WW/ROW
998-39379	SIM:PSIM1+LOONIE&&PLATFORM:MAV25.3&&BOARD_REV:PROTO2&&RF_SKU:RS-CHN	U_ESIM_E	1	IC,VESTA,A1,DEV2-CN2,WLCSP16	P2 CN

ESIM ALT TABLE

ALTERNATE PART NO.	PRIMARY PART NO.	REFERENCE DESIGNATORS
998-39380	998-39379	U_ESIM_E

Alternate for P2 CN SKU only

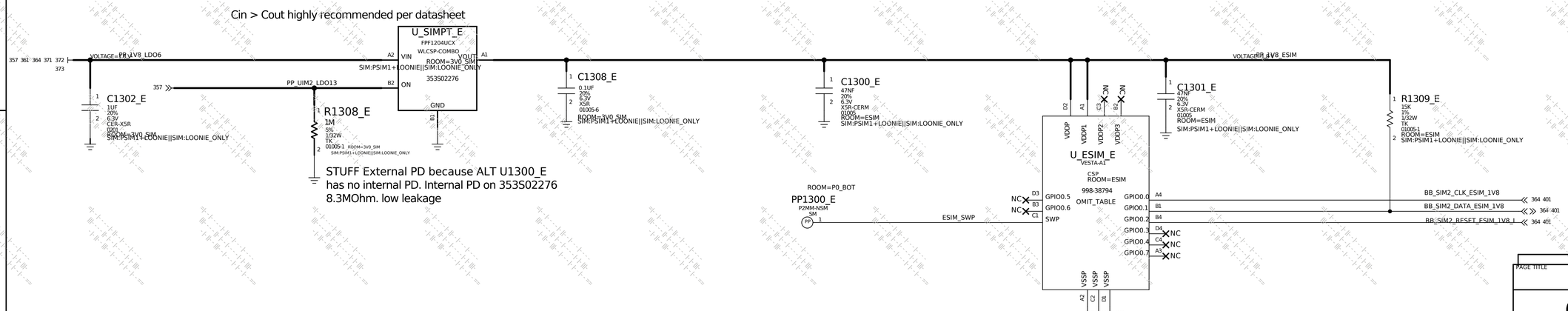

CONFIDENTIAL AND PROPRIETARY APPLE SYSTEM DESIGN. FOR REFERENCE ONLY - NOT A CHANGE REQUEST

PAGE TITLE: ESIM (13)

Apple Inc.

DRAWING NUMBER: 051-12836 SIZE: D

REVISION: 4.0.0

BRANCH: proto-2

PAGE: 13 OF 49

SHEET: 50 OF 100

NOTICE OF PROPRIETARY PROPERTY:
THE INFORMATION CONTAINED HEREIN IS THE PROPRIETARY PROPERTY OF APPLE INC.
THE POSESSOR AGREES TO THE FOLLOWING:
I TO MAINTAIN THIS DOCUMENT IN CONFIDENCE
II NOT TO REPRODUCE OR COPY IT
III NOT TO REVEAL OR PUBLISH IT IN WHOLE OR PART
IV ALL RIGHTS RESERVED

BLANK (RESERVED)

CONFIDENTIAL AND PROPRIETARY APPLE SYSTEM DESIGN. FOR REFERENCE ONLY - NOT A CHANGE REQUEST

PAGE TITLE	BLANK (14)
	Apple Inc.
DRAWING NUMBER	051-12836
SIZE	D
REVISION	4.0.0
BRANCH	proto-2
PAGE	14 OF 49
SHEET	51 OF 100

NOTICE OF PROPRIETARY PROPERTY:

THE INFORMATION CONTAINED HEREIN IS THE PROPRIETARY PROPERTY OF APPLE INC.
THE POSESSOR AGREES TO THE FOLLOWING:
I TO MAINTAIN THIS DOCUMENT IN CONFIDENCE
II NOT TO REPRODUCE OR COPY IT
III NOT TO REVEAL OR PUBLISH IT IN WHOLE OR PART
IV ALL RIGHTS RESERVED

TRANSCEIVER: PDN

NOTE: 1UF SHOULD BE AS CLOSE AS POSSIBLE TO CORRESPONDING PIN ON SDR
NOTE: 4UF BULK COULD BE FURTHER AWAY AND MAKE SURE THE STAR ROUTING IS FROM 4UF.

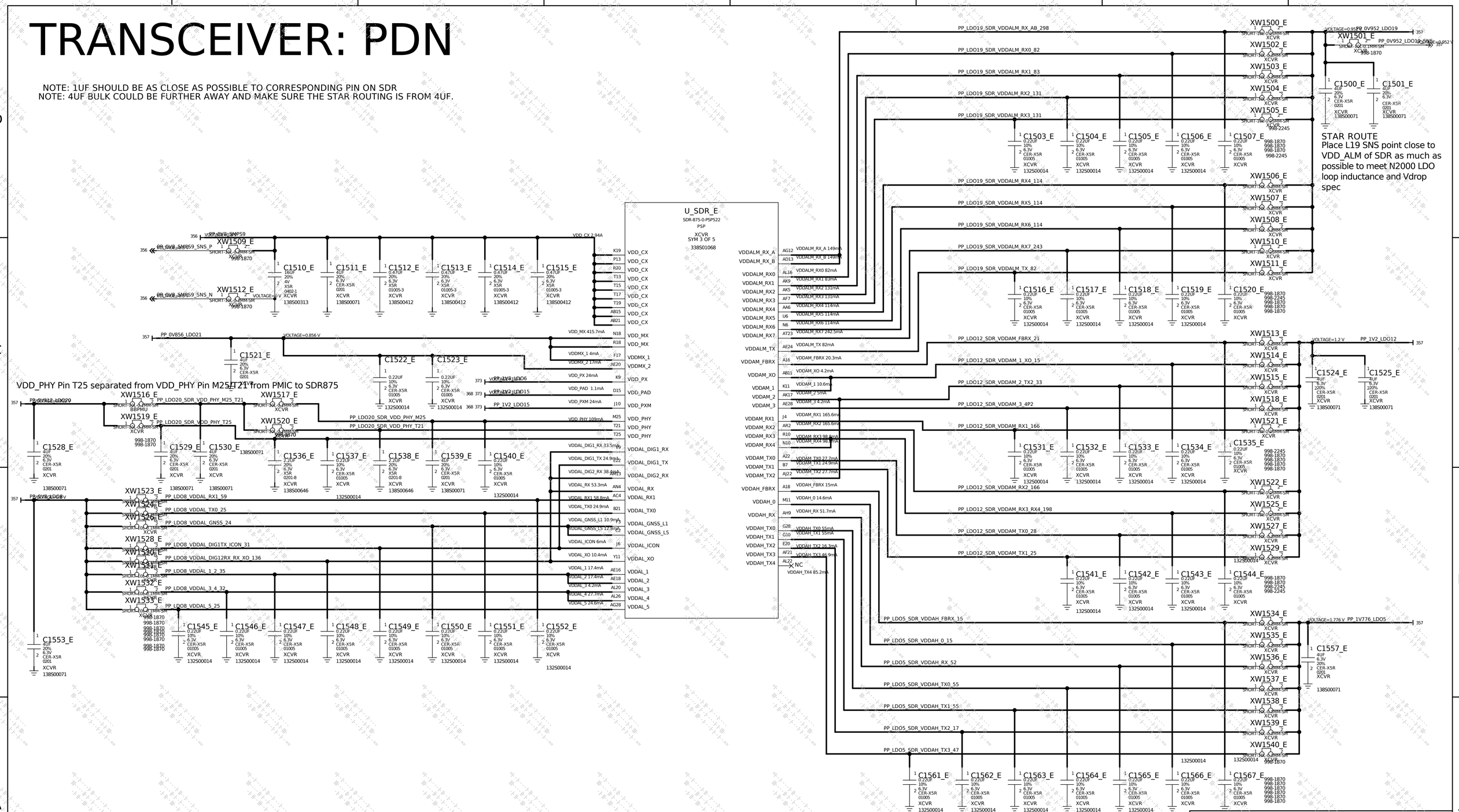

CONFIDENTIAL AND PROPRIETARY APPLE SYSTEM DESIGN. FOR REFERENCE ONLY - NOT A CHANGE REQUEST

PAGE TITLE: XCVR POWER (15)

Apple Inc.

DRAWING NUMBER: 051-12836 | SIZE: D

REVISION: 4.0.0

BRANCH: proto-2

PAGE: 15 OF 49

SHEET: 52 OF 100

NOTICE OF PROPRIETARY PROPERTY:
THE INFORMATION CONTAINED HEREIN IS THE PROPRIETARY PROPERTY OF APPLE INC.
THE POSESSOR AGREES TO THE FOLLOWING:
I TO MAINTAIN THIS DOCUMENT IN CONFIDENCE
II NOT TO REPRODUCE OR COPY IT
III NOT TO REVEAL OR PUBLISH IT IN WHOLE OR PART
IV ALL RIGHTS RESERVED

TRANSCEIVER 0: DIGITAL & GND

CONFIDENTIAL AND PROPRIETARY APPLE SYSTEM DESIGN. FOR REFERENCE ONLY - NOT A CHANGE REQUEST

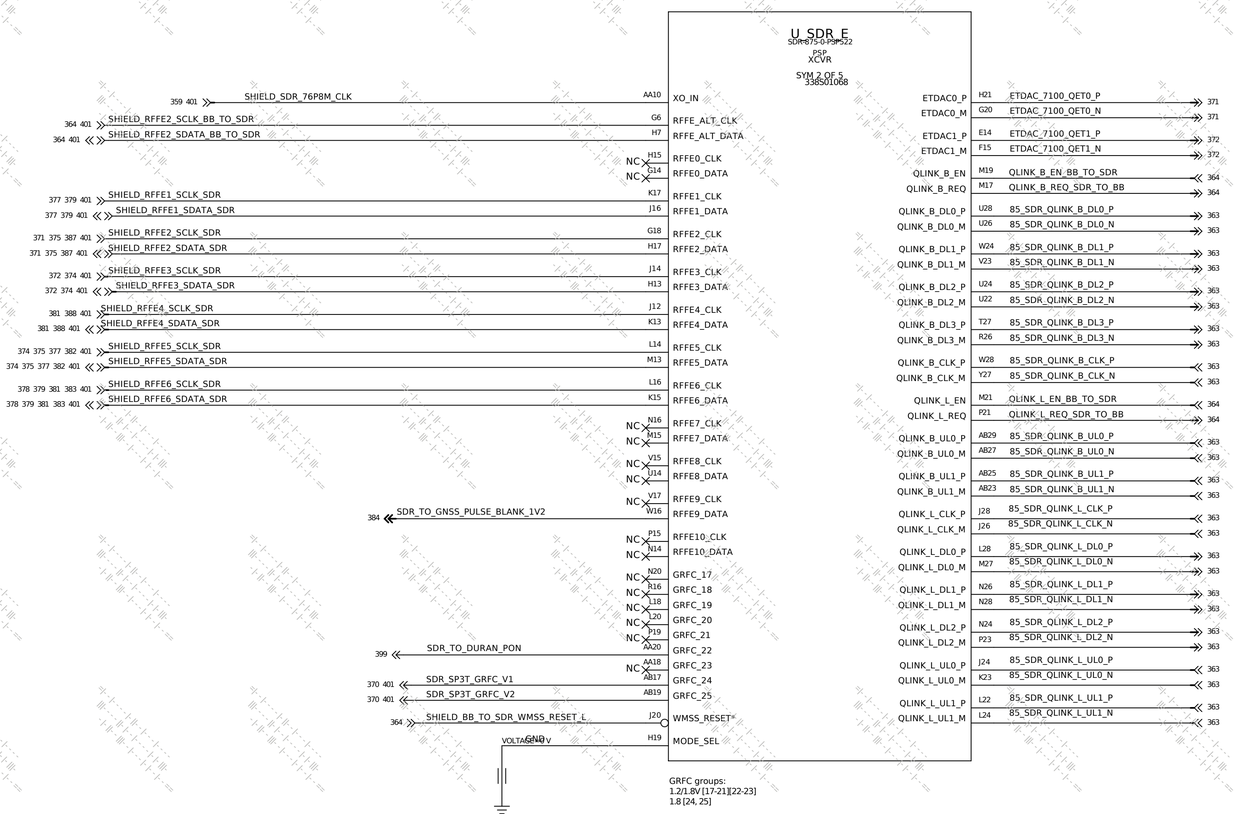

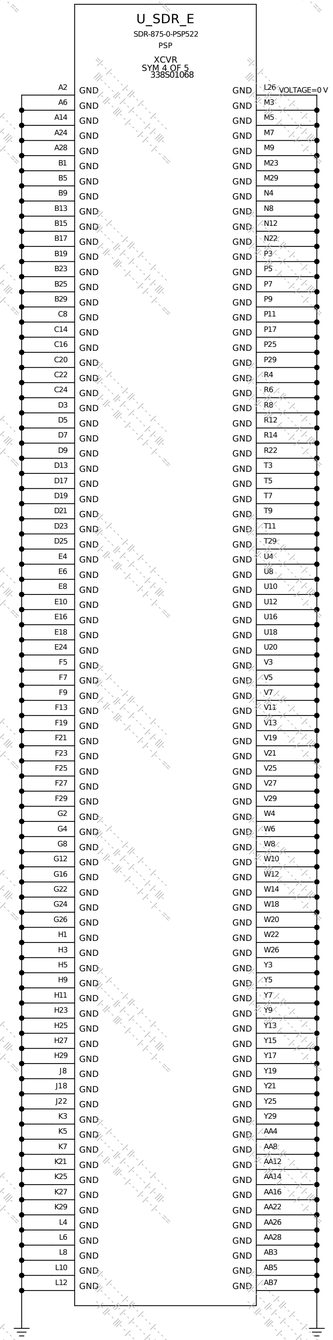

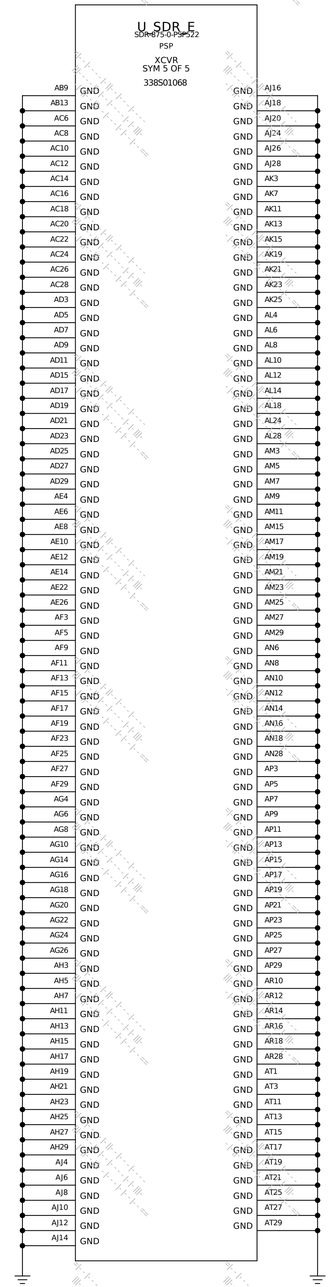

PAGE TITLE
XCVR DIGITAL & GND (16)

Apple Inc.

DRAWING NUMBER 051-12836
SIZE D
REVISION 4.0.0
BRANCH proto-2
PAGE 16 OF 49
SHEET 53 OF 100

NOTICE OF PROPRIETARY PROPERTY:
THE INFORMATION CONTAINED HEREIN IS THE PROPRIETARY PROPERTY OF APPLE INC.
THE POSESSOR AGREES TO THE FOLLOWING:
I TO MAINTAIN THIS DOCUMENT IN CONFIDENCE
II NOT TO REPRODUCE OR COPY IT
III NOT TO REVEAL OR PUBLISH IT IN WHOLE OR PART
IV ALL RIGHTS RESERVED

TRANSCEIVER: TX & RX

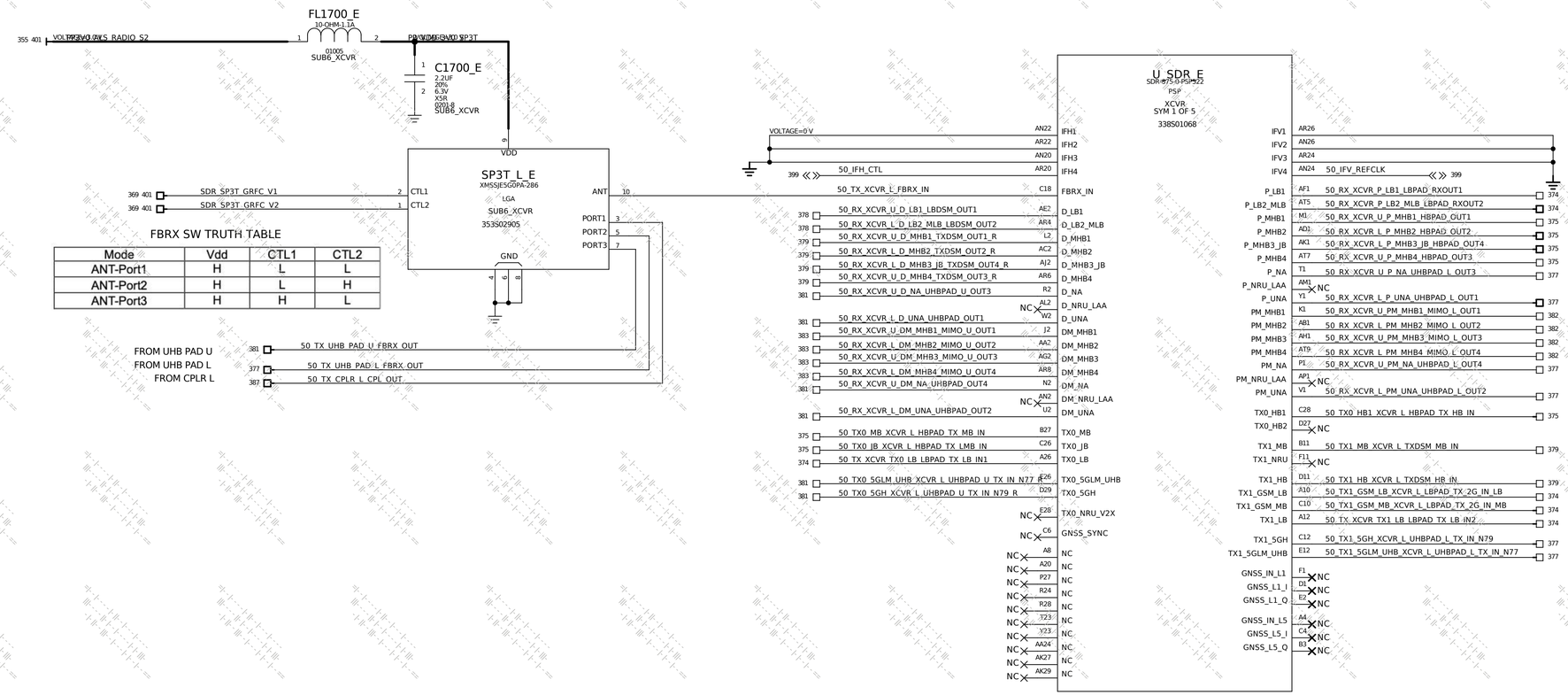

FBRX SW TRUTH TABLE

Mode	Vdd	CTL1	CTL2
ANT-Port1	H	L	L
ANT-Port2	H	L	H
ANT-Port3	H	H	L

CLASS DEFINITIONS			COMMA SEPARATED WITH WILDCARD SUPPORT: NET NAMES EX: DDR*	CLEAR OVERRIDE
CLASS NAME	PRI	CONSTRAINT SET	DP NAMES EX: DP:DP_AA*,DP_BB* (LINE STARTS WITH FLAG DP:)	Y/N
P_50_TX_THIN	P	A_50_THIN_SE	50_TX_IN_XCVR_TX*, 50_TX_IN_XCVR_FBRX*	N
P_50_TX_THIN	P	A_50_THIN_SE	50_TX_IN_TX2_UHB_PAD_TX*	N
P_50_RX_THIN	P	A_50_THIN_SE	50_RX_XCVR_PRX*, 50_RX_XCVR_DRX*	N
P_50_RX_THIN	P	A_50_THIN_SE	50_LAA_RX_XCVR*	N
P_50_RX_THIN	P	A_50_THIN_SE	50_RX_GNSS*,50_RX_GNSS_L5_U	N
P_50_CPLR_THIN	P	A_50_THIN_SE	50_CPLR_L*	N
P_50_CPLR_WIDE	P	A_50_WIDE_SE	50_CPLR_U*	N
P_50_TRX_WIDE	P	A_50_WIDE_SE	50_TRX_L5_LNA_IN_U	N

CLASS DEFINITIONS			COMMA SEPARATED WITH WILDCARD SUPPORT: NET NAMES EX: DDR*	CLEAR OVERRIDE
CLASS NAME	PRI	CONSTRAINT SET	DP NAMES EX: DP:DP_AA*,DP_BB* (LINE STARTS WITH FLAG DP:)	Y/N
S_50_TX_THIN	S	A_DIELECTRIC_4XV_50_THIN_SE	50_TX_IN_XCVR_TX*	N
S_50_CPLR_THIN	S	A_DIELECTRIC_4XV_50_THIN_SE	50_TX_IN_XCVR_FBRX*	N
S_50_TX_THIN	S	A_DIELECTRIC_4XV_50_THIN_SE	50_TX_IN_TX2_UHB_PAD_TX*	N
S_50_RX_THIN	S	A_DIELECTRIC_4XV_50_THIN_SE	50_RX_XCVR_PRX*, 50_RX_XCVR_DRX*	N
S_50_RX_THIN	S	A_DIELECTRIC_4XV_50_THIN_SE	50_LAA_RX_XCVR*	N
S_50_TRX_THIN	S	A_DIELECTRIC_4XV_50_THIN_SE	50_RX_GNSS*,50_RX_GNSS_L5_U	N
S_50_CPLR_THIN	S	A_DIELECTRIC_4XV_50_THIN_SE	50_CPLR_L*	N
S_50_TRX_WIDE	S	A_DIELECTRIC_4XV_50_THIN_SE	50_CPLR_U*,50_TRX_L5_LNA_IN_U	N

CONFIDENTIAL AND PROPRIETARY APPLE SYSTEM DESIGN. FOR REFERENCE ONLY - NOT A CHANGE REQUEST

PAGE TITLE: XCVR RF (17)

Apple Inc.

DRAWING NUMBER: 051-12836 SIZE: D

REVISION: 4.0.0

BRANCH: proto-2

PAGE: 17 OF 49

SHEET: 54 OF 100

NOTICE OF PROPRIETARY PROPERTY:
THE INFORMATION CONTAINED HEREIN IS THE PROPRIETARY PROPERTY OF APPLE INC.
THE POSESSOR AGREES TO THE FOLLOWING:
I TO MAINTAIN THIS DOCUMENT IN CONFIDENCE
II NOT TO REPRODUCE OR COPY IT
III NOT TO REVEAL OR PUBLISH IT IN WHOLE OR PART
IV ALL RIGHTS RESERVED

QET0 LBPAD + HBPAD + UHB_U

CONFIDENTIAL AND PROPRIETARY APPLE SYSTEM DESIGN. FOR REFERENCE ONLY - NOT A CHANGE REQUEST

COMM P.F.O.	NET RULE ASSIGNMENT	
	CONSTRAINT SET	COMMA SEPARATED NET NAMES (WILDCARD SUPPORT EX: DDR*)
P	A_PWR_2A	PP_QET0_ET*, PP_QET0_2G*
P	A_PWR_3A	PP_VDD_MAIN_QET0

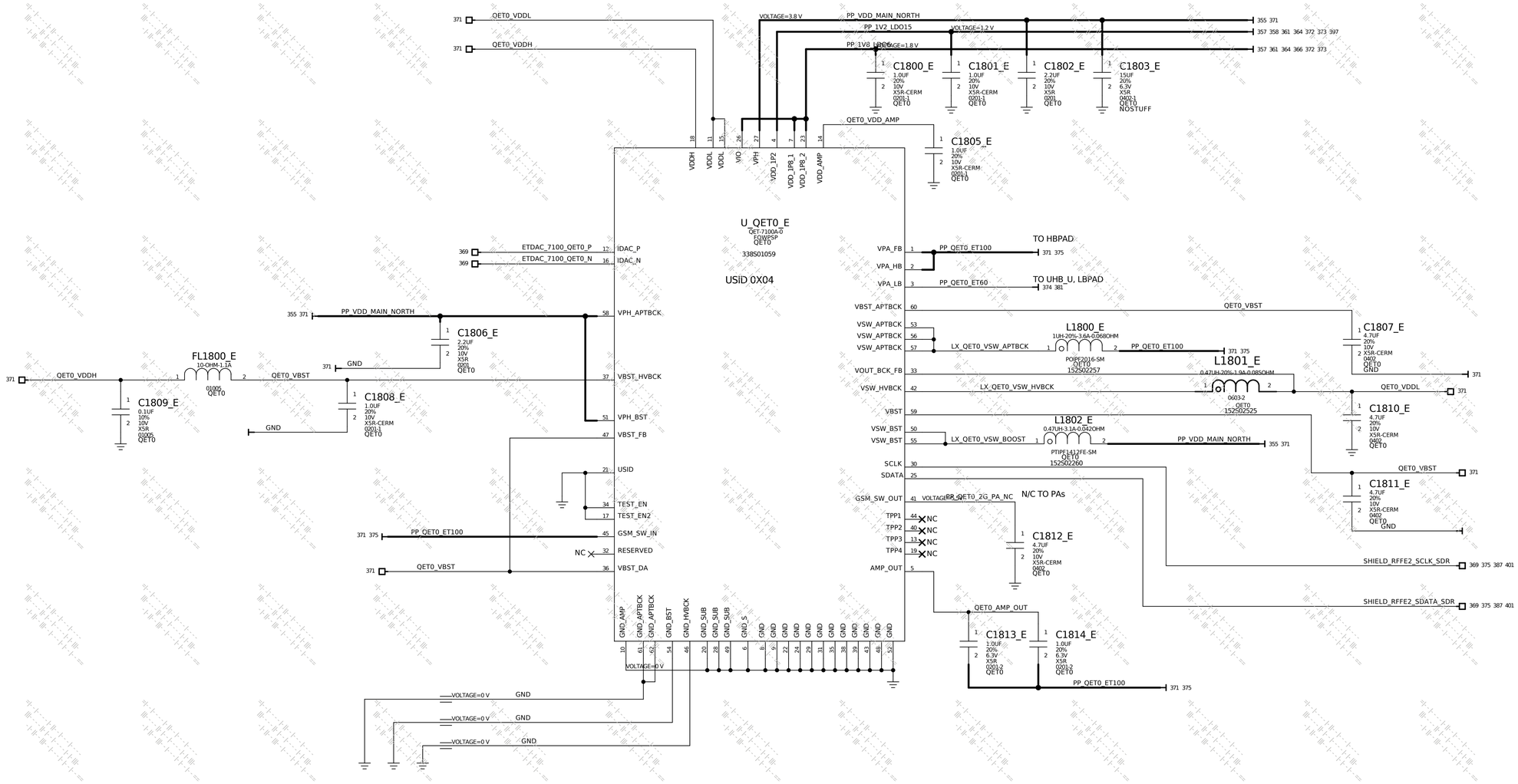

PAGE TITLE: QET0 (18)

Apple Inc.

DRAWING NUMBER: 051-12836 | SIZE: D

REVISION: 4.0.0

BRANCH: proto-2

PAGE: 18 OF 49

SHEET: 55 OF 100

NOTICE OF PROPRIETARY PROPERTY:
THE INFORMATION CONTAINED HEREIN IS THE PROPRIETARY PROPERTY OF APPLE INC.
THE POSESSOR AGREES TO THE FOLLOWING:
I TO MAINTAIN THIS DOCUMENT IN CONFIDENCE
II NOT TO REPRODUCE OR COPY IT
III NOT TO REVEAL OR PUBLISH IT IN WHOLE OR PART
IV ALL RIGHTS RESERVED

QET1 UHB_L + LBPAD + TxDSM

CONFIDENTIAL AND PROPRIETARY APPLE SYSTEM DESIGN. FOR REFERENCE ONLY - NOT A CHANGE REQUEST

	NET RULE ASSIGNMENT	
	CONSTRAINT SET	COMMA SEPARATED NET NAMES (WILDCARD SUPPORT EX: DDR*)
P	A_PWR_2A	PP_QET1_ET*
P	A_PWR_3A	PP_VDD_MAIN_QET1

QET1

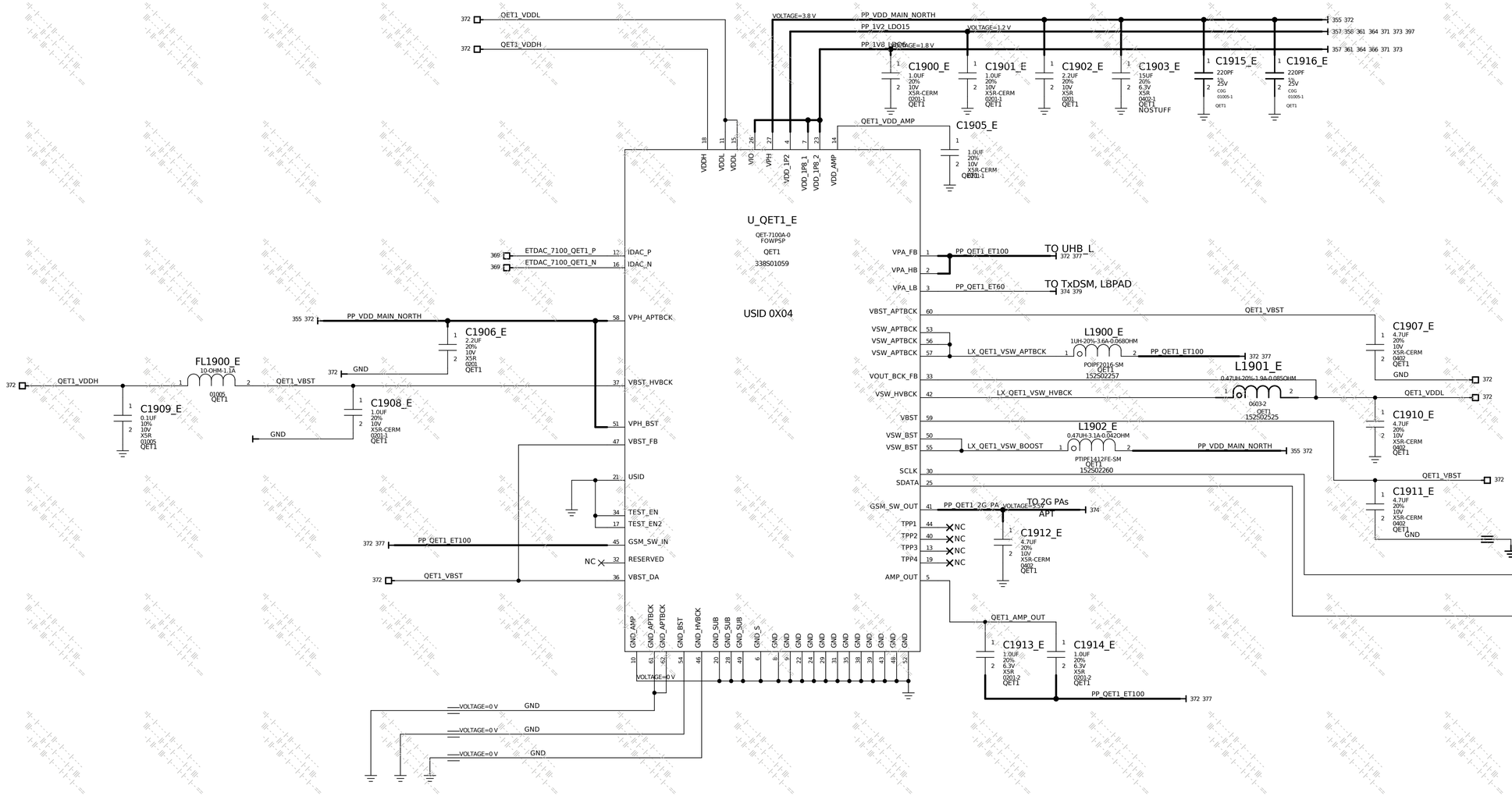

PAGE TITLE	
QET1 (19)	
Apple Inc.	DRAWING NUMBER 051-12836 / SIZE D
	REVISION 4.0.0
	BRANCH proto-2
	PAGE 19 OF 49
	SHEET 56 OF 100

NOTICE OF PROPRIETARY PROPERTY:
THE INFORMATION CONTAINED HEREIN IS THE PROPRIETARY PROPERTY OF APPLE INC.
THE POSESSOR AGREES TO THE FOLLOWING:
I TO MAINTAIN THIS DOCUMENT IN CONFIDENCE
II NOT TO REPRODUCE OR COPY IT
III NOT TO REVEAL OR PUBLISH IT IN WHOLE OR PART
IV ALL RIGHTS RESERVED

RF FE SYNONYMS

CONFIDENTIAL AND PROPRIETARY APPLE SYSTEM DESIGN. FOR REFERENCE ONLY - NOT A CHANGE REQUEST

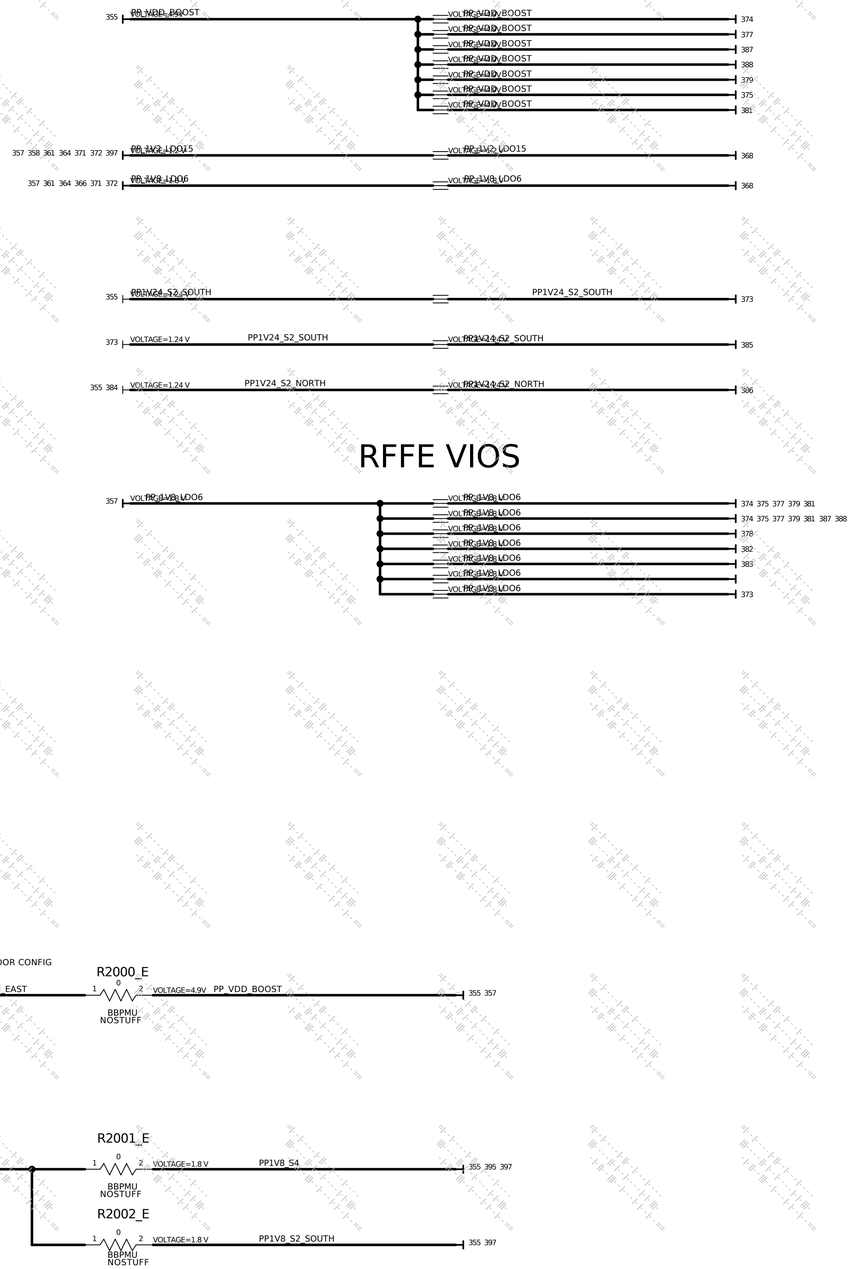

PAGE TITLE	RF FE SYNONYMS (20)
Apple Inc.	DRAWING NUMBER 051-12836 · SIZE D
	REVISION 4.0.0
	BRANCH proto-2
	PAGE 20 OF 49
	SHEET 57 OF 100

NOTICE OF PROPRIETARY PROPERTY:
THE INFORMATION CONTAINED HEREIN IS THE PROPRIETARY PROPERTY OF APPLE INC.
THE POSESSOR AGREES TO THE FOLLOWING:
I TO MAINTAIN THIS DOCUMENT IN CONFIDENCE
II NOT TO REPRODUCE OR COPY IT
III NOT TO REVEAL OR PUBLISH IT IN WHOLE OR PART
IV ALL RIGHTS RESERVED

LB PAD

CONFIDENTIAL AND PROPRIETARY APPLE SYSTEM DESIGN. FOR REFERENCE ONLY - NOT A CHANGE REQUEST

CLASS DEFINITIONS			COMMA SEPARATED WITH WILDCARD SUPPORT: NET NAMES EX: DDR*	CLEAR OVERRIDE
CLASS NAME	CONST SET	CONSTRAINT SET	DP NAMES EX: DP:DP_AA*,DP_BB* (LINE STARTS WITH FLAG DP:)	Y/N
P_50_TX_THIN	P	A_50_THIN_SE	50_TX_IN_TX0_LB_PAD_TX_LB_IN	N
P_50_RX_THIN	P	A_50_THIN_SE	50_RX_LB_PAD_PRX_OUT	N
P_50_RX_THIN	P	A_50_THIN_SE	50_TX_IN_LB_PAD_TX_2G_IN	N
P_50_TRX_WIDE	P	A_50_WIDE_SE	50_TRX_IN_2G_LB_OUT*, 50_TRX_LB_PORTB_RX*	N
P_50_TRX_WIDE	P	A_50_WIDE_SE	50_TRX_LB_PAD_ANT1*, 50_TRX_LB_PORTB_TX*	N

DOMAIN	NET RULE ASSIGNMENT	
DEF	CONSTRAINT SET	COMMA SEPARATED NET NAMES (WILDCARD SUPPORT EX: DDR*)
P	A_PWR_100MA	VDD_LNA *

CLASS DEFINITIONS			COMMA SEPARATED WITH WILDCARD SUPPORT: NET NAMES EX: DDR*	CLEAR OVERRIDE
CLASS NAME	CONST SET	CONSTRAINT SET	DP NAMES EX: DP:DP_AA*,DP_BB* (LINE STARTS WITH FLAG DP:)	Y/N
S_50_TX_THIN	S	A_DIELECTRIC_4XV_50_THIN_SE	50_TX_IN_TX0_LB_PAD_TX_LB_IN	N
S_50_RX_THIN	S	A_DIELECTRIC_4XV_50_THIN_SE	50_RX_LB_PAD_PRX_OUT	N
S_50_TRX_THIN	S	A_DIELECTRIC_4XV_50_THIN_SE	50_TX_IN_LB_PAD_TX_2G_IN	N
S_50_TRX_WIDE	S	A_DIELECTRIC_4XV_50_THIN_SE	50_TRX_IN_2G_LB_OUT*	N
S_50_TRX_THIN	S	A_DIELECTRIC_4XV_50_THIN_SE	50_TRX_LB_PORTB_RX1	N
S_50_TRX_WIDE	S	A_DIELECTRIC_4XV_50_THIN_SE	50_TRX_LB_PORTB_RX1_M, 50_TRX_LB_PORTB_RX1_ANT2	N
S_50_TRX_WIDE	S	A_DIELECTRIC_4XV_50_THIN_SE	50_TRX_LB_PAD_ANT1*	N
S_50_TRX_THIN	S	A_DIELECTRIC_4XV_50_THIN_SE	50_TRX_LB_PORTB_TX_ANT2	N
S_50_TRX_WIDE	S	A_DIELECTRIC_4XV_50_THIN_SE	50_TRX_LB_PORTB_TX, 50_TRX_LB_PORTB_TX_M	N

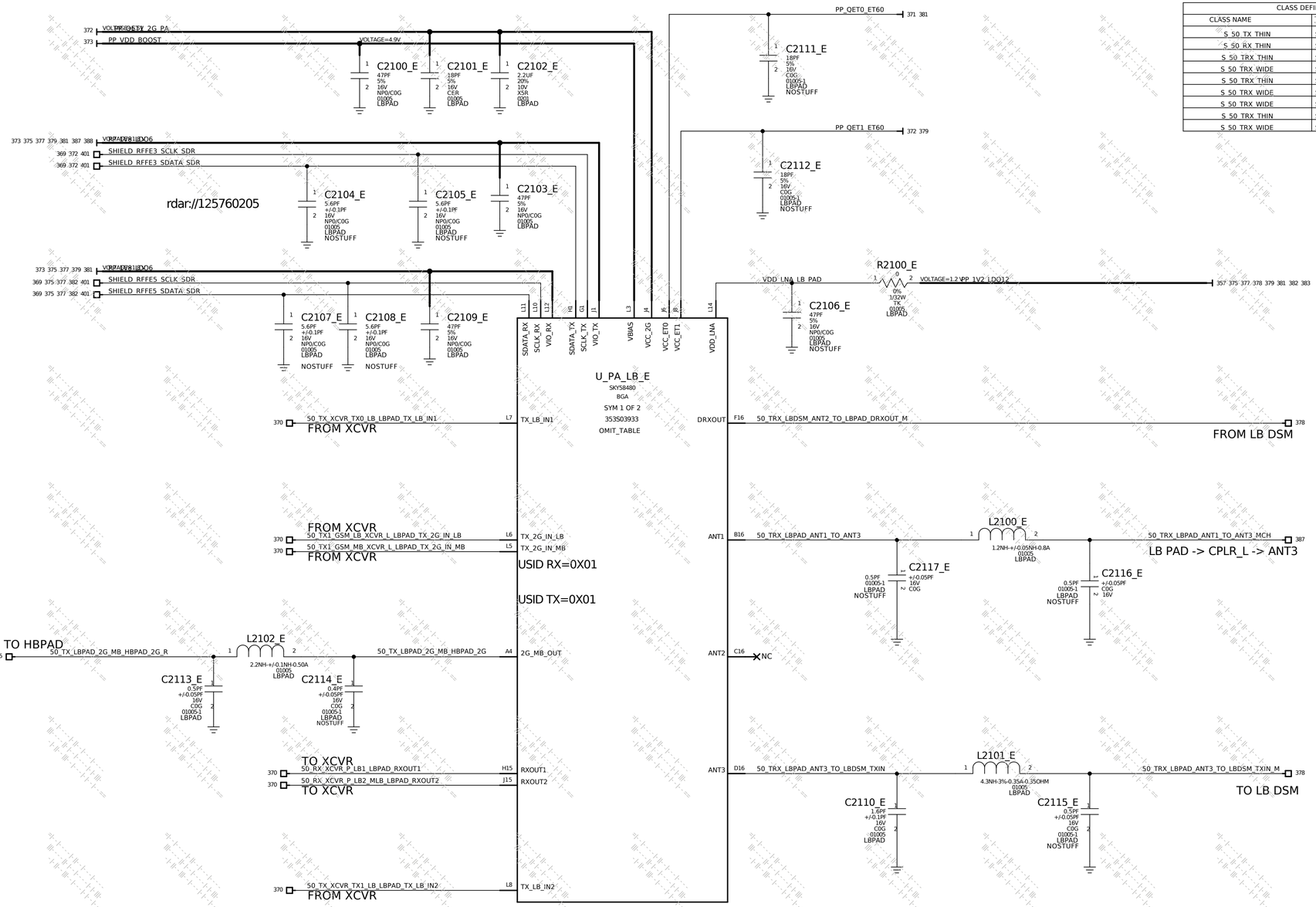

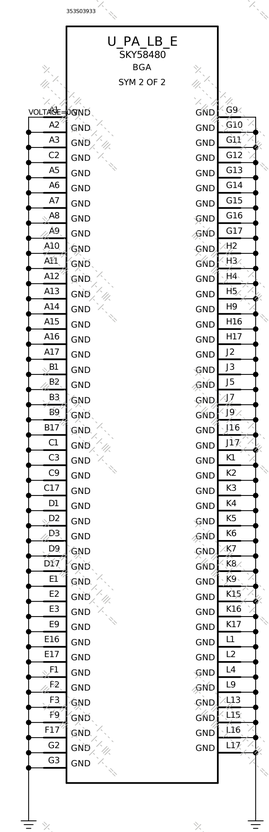

CONFIDENTIAL AND PROPRIETARY APPLE SYSTEM DESIGN. FOR REFERENCE PURPOSE ONLY - NOT A CHANGE REQUEST

PAGE TITLE
LB PAD (21)

Apple Inc.

DRAWING NUMBER 051-12836 | SIZE D
REVISION 4.0.0
BRANCH proto-2
PAGE 21 OF 49
SHEET 58 OF 100

NOTICE OF PROPRIETARY PROPERTY:
THE INFORMATION CONTAINED HEREIN IS THE PROPRIETARY PROPERTY OF APPLE INC.
THE POSESSOR AGREES TO THE FOLLOWING:
I TO MAINTAIN THIS DOCUMENT IN CONFIDENCE
II NOT TO REPRODUCE OR COPY IT
III NOT TO REVEAL OR PUBLISH IT IN WHOLE OR PART
IV ALL RIGHTS RESERVED

CONFIDENTIAL AND PROPRIETARY APPLE SYSTEM DESIGN. FOR REFERENCE ONLY - NOT A CHANGE REQUEST

HB PAD RF

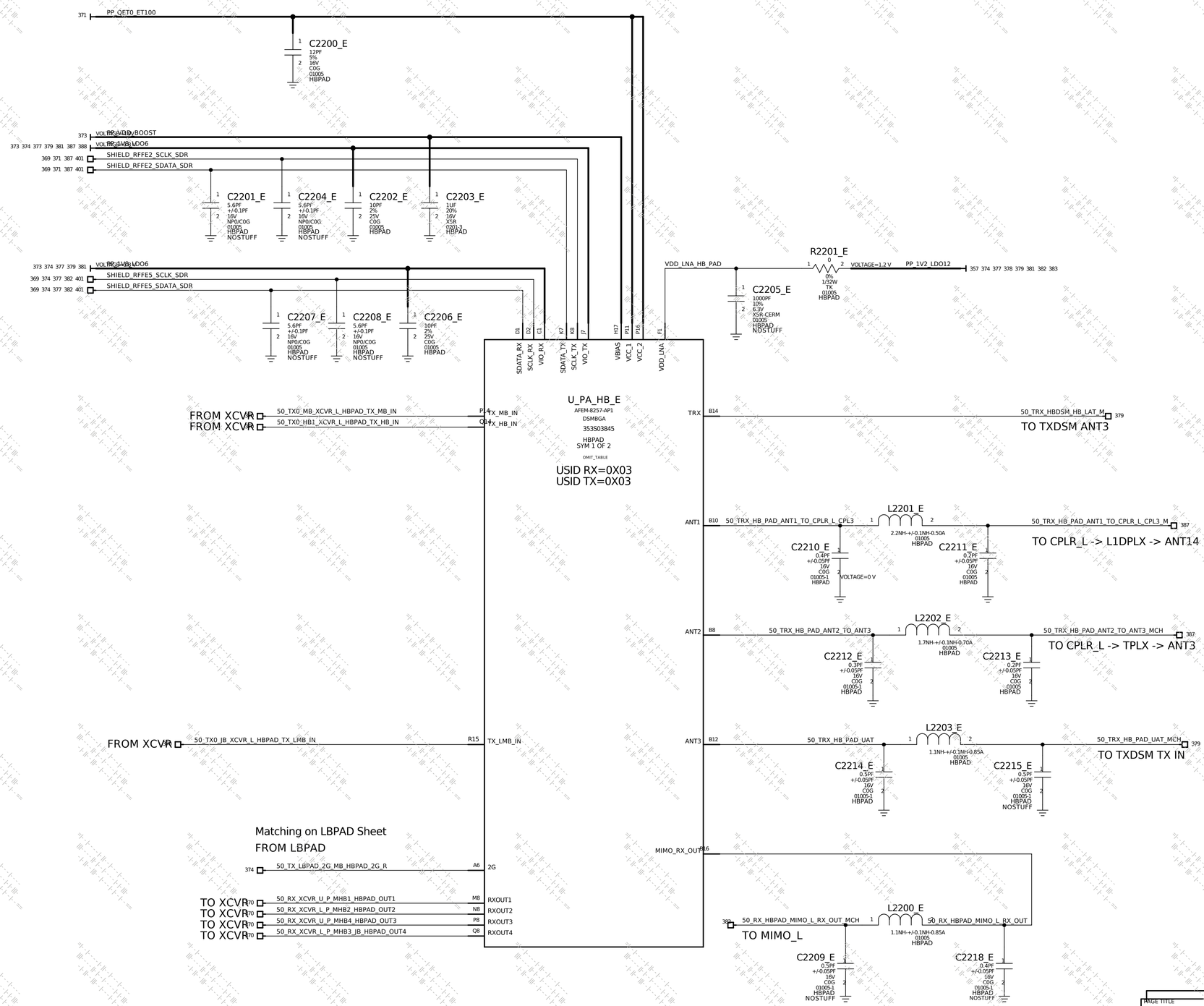

CONFIDENTIAL AND PROPRIETARY APPLE SYSTEM DESIGN. FOR REFERENCE PURPOSE ONLY - NOT A CHANGE REQUEST

PAGE TITLE: HB PAD RF (22)

Apple Inc.

DRAWING NUMBER: 051-12836 | SIZE: D

REVISION: 4.0.0

BRANCH: proto-2

PAGE: 22 OF 49

SHEET: 59 OF 100

NOTICE OF PROPRIETARY PROPERTY:
THE INFORMATION CONTAINED HEREIN IS THE PROPRIETARY PROPERTY OF APPLE INC.
THE POSESSOR AGREES TO THE FOLLOWING:
I TO MAINTAIN THIS DOCUMENT IN CONFIDENCE
II NOT TO REPRODUCE OR COPY IT
III NOT TO REVEAL OR PUBLISH IT IN WHOLE OR PART
IV ALL RIGHTS RESERVED

HB PAD GND

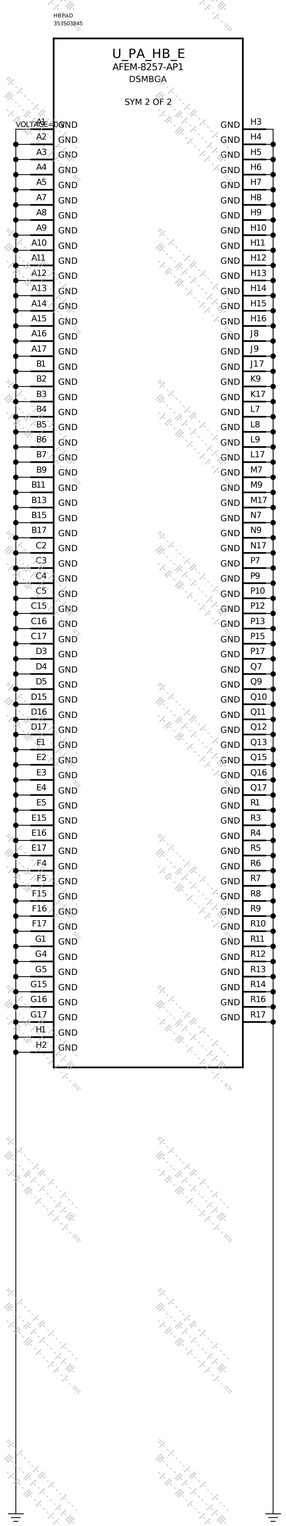

RF CONSTRAINTS

CLASS DEFINITIONS			COMMA SEPARATED WITH WILDCARD SUPPORT: NET NAMES EX: DDR*	
CLASS NAME	...	CONSTRAINT SET	DP NAMES EX: DP:DP_AA*,DP_BB* (LINE STARTS WITH FLAG DP:)	CLEAR PREVIOUS Y/N
S_50_RX_THIN	S	A_DIELECTRIC_4XV_50_THIN_SE	50_RX_HB_PAD_PRX_OUT*	N
S_50_TX_THIN	S	A_DIELECTRIC_4XV_50_THIN_SE	50_TX_IN_TX0_HB_PAD_TX*	N
S_50_TRX_THIN	S	A_DIELECTRIC_4XV_50_THIN_SE	50_TRX_LMB_HB_PORTB_RX1_DRX_OUT	N
S_50_TRX_WIDE	S	A_DIELECTRIC_4XV_50_THIN_SE	50_TRX_LMB_HB_PORTB_RX1_M, 50_TRX_LMB_HB_PORTB_RX1	N
S_50_TRX_THIN	S	A_DIELECTRIC_4XV_50_THIN_SE	50_TRX_HB_ANT1, 50_TRX_HB_ANT2	N
S_50_TRX_WIDE	S	A_DIELECTRIC_4XV_50_THIN_SE	50_TRX_HB_ANT1_M, 50_TRX_HB_ANT2_M	N
S_50_TRX_THIN	S	A_DIELECTRIC_4XV_50_THIN_SE	50_TRX_HB_PAD_MIMO_RX_OUT	N
S_50_TRX_WIDE	S	A_DIELECTRIC_4XV_50_THIN_SE	50_TRX_HB_PAD_MIMO1_RX_OUT*	N
S_50_TRX_THIN	S	A_DIELECTRIC_4XV_50_THIN_SE	50_TRX_LMB_HB_PORTB_TX_UAT	N
S_50_TRX_WIDE	S	A_DIELECTRIC_4XV_50_THIN_SE	50_TRX_LMB_HB_PORTB_TX_M, 50_TRX_LMB_HB_PORTB_TX	N
S_50_TRX_WIDE	S	A_DIELECTRIC_4XV_50_THIN_SE	50_TRX_IN_2G_MB_OUT*	N
S_50_TRX_THIN	S	A_DIELECTRIC_4XV_50_THIN_SE	50_TX_IN_TX0_HB_PAD_TX_LMB_IN1	N

CLASS DEFINITIONS			COMMA SEPARATED WITH WILDCARD SUPPORT: NET NAMES EX: DDR*	
CLASS NAME	...	CONSTRAINT SET	DP NAMES EX: DP:DP_AA*,DP_BB* (LINE STARTS WITH FLAG DP:)	CLEAR PREVIOUS Y/N
P_50_RX_THIN	P	A_50_THIN_SE	50_RX_HB_PAD_PRX_OUT*,50_TX_IN_TX0_HB_PAD_TX_LMB_IN1	N
P_50_TX_THIN	P	A_50_THIN_SE	50_TX_IN_TX0_HB_PAD_TX*	N
P_50_TRX_WIDE	P	A_50_WIDE_SE	50_TRX_LMB_HB_PORTB_RX1*	N
P_50_TRX_WIDE	P	A_50_WIDE_SE	50_TRX_HB_PAD_ANT1*, 50_TRX_HB_PAD_ANT2*	N
P_50_TRX_WIDE	P	A_50_WIDE_SE	50_TRX_HB_PAD_MIMO1_RX*, 50_TRX_HB_PAD_MIMO_RX_OUT	N
P_50_TRX_WIDE	P	A_50_WIDE_SE	50_TRX_LMB_HB_PORTB_TX*	N
P_50_TRX_WIDE	P	A_50_WIDE_SE	50_TRX_IN_2G_MB_OUT*	N

CONFIDENTIAL AND PROPRIETARY APPLE SYSTEM DESIGN. FOR REFERENCE ONLY - NOT A CHANGE REQUEST

PAGE TITLE: HB PAD GND & RF CONSTRAINTS (23)

Apple Inc.

DRAWING NUMBER: 051-12836 SIZE: D

REVISION: 4.0.0

BRANCH: proto-2

PAGE: 23 OF 49

SHEET: 60 OF 100

NOTICE OF PROPRIETARY PROPERTY:
THE INFORMATION CONTAINED HEREIN IS THE PROPRIETARY PROPERTY OF APPLE INC.
THE POSESSOR AGREES TO THE FOLLOWING:
I TO MAINTAIN THIS DOCUMENT IN CONFIDENCE
II NOT TO REPRODUCE OR COPY IT
III NOT TO REVEAL OR PUBLISH IT IN WHOLE OR PART
IV ALL RIGHTS RESERVED

UHB PAD LAT

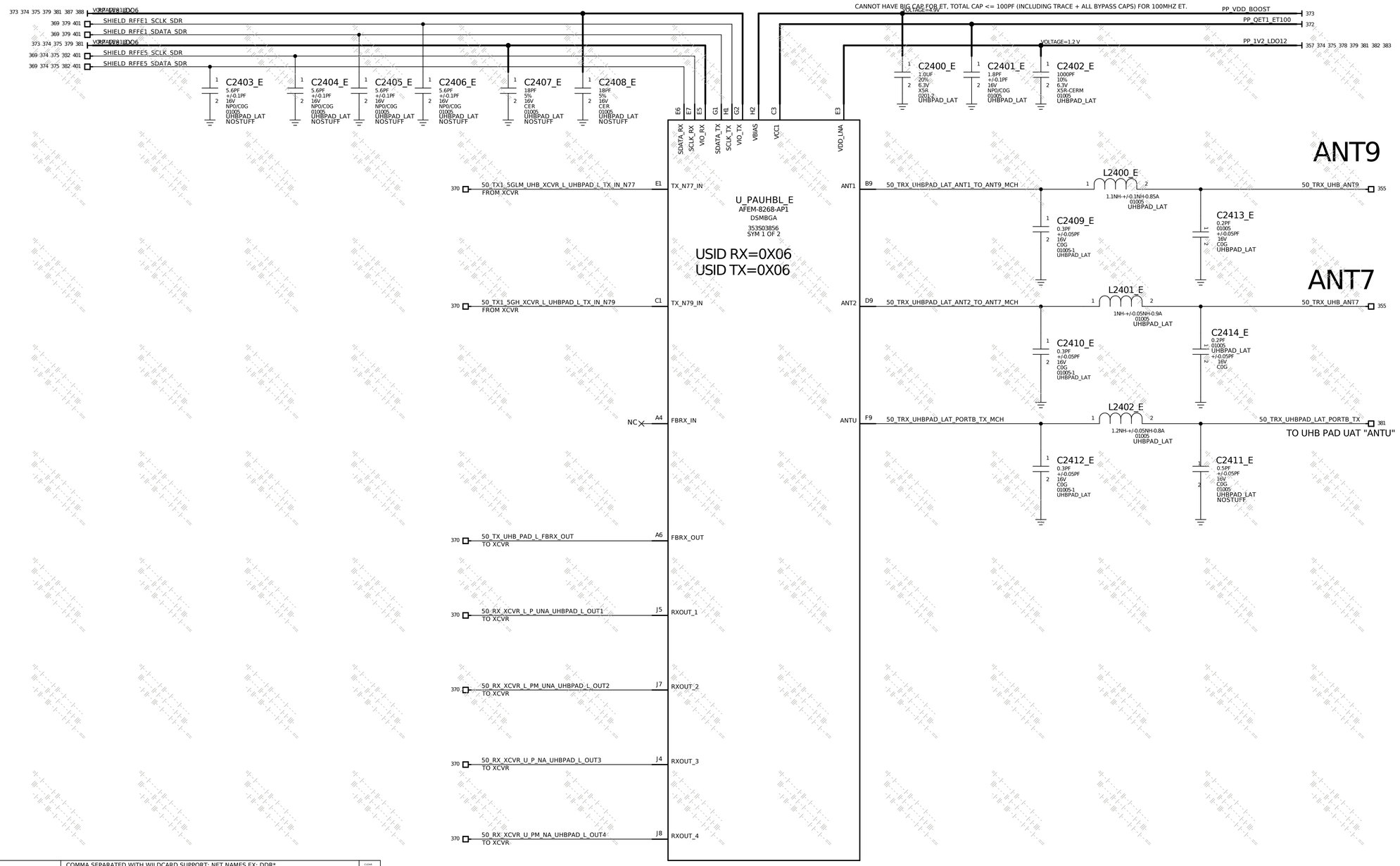

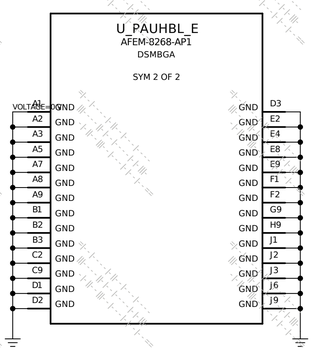

CLASS DEFINITIONS			COMMA SEPARATED WITH WILDCARD SUPPORT: NET NAMES EX: DDR*	CLEAR OVERRIDE
CLASS NAME	CLASS TYPE	CONSTRAINT SET	DP NAMES EX: DP:DP_AA*,DP_BB* (LINE STARTS WITH FLAG DP:)	Y/N
P_50_RX_THIN	P	A_50_THIN_SE	50_RX_UHB_PAD_UHB_RX_OUT*, 50_RX_UHB_PAD_N79_RX_OUT*	N
P_50_TRX_WIDE	P	A_50_WIDE_SE	50_TRX_PAUHBU_UHB_ANT1_TO_ANT7	N
P_50_TRX_WIDE	P	A_50_WIDE_SE	50_TRX_PAUHBU_UHB_ANT2_TO_ANT9	N
P_50_TRX_WIDE	P	A_50_WIDE_SE	50_TRX_UHB*	N

CLASS DEFINITIONS			COMMA SEPARATED WITH WILDCARD SUPPORT: NET NAMES EX: DDR*	CLEAR OVERRIDE
CLASS NAME	CLASS TYPE	CONSTRAINT SET	DP NAMES EX: DP:DP_AA*,DP_BB* (LINE STARTS WITH FLAG DP:)	Y/N
S_50_RX_THIN	S	A_DIELECTRIC_4XV_50_THIN_SE	50_RX_UHB_PAD_UHB_RX_OUT*	N
S_50_RX_THIN	S	A_DIELECTRIC_4XV_50_THIN_SE	50_RX_UHB_PAD_N79_RX_OUT*	N
S_50_TRX_WIDE	S	A_DIELECTRIC_4XV_50_THIN_SE	50_TRX_PAUHBU_UHB_ANT1_TO_ANT7	N
S_50_TRX_WIDE	S	A_DIELECTRIC_4XV_50_THIN_SE	50_TRX_PAUHBU_UHB_ANT2_TO_ANT9	N
S_50_TRX_THIN	S	A_DIELECTRIC_4XV_50_THIN_SE	50_TRX_UHB_PAD_PORTB_TX	N
S_50_TRX_WIDE	S	A_DIELECTRIC_4XV_50_THIN_SE	50_TRX_UHB_PORTB_TX, 50_TRX_UHB_DSM_PORTB_TX	N

CONFIDENTIAL AND PROPRIETARY APPLE SYSTEM DESIGN. FOR REFERENCE ONLY - NOT A CHANGE REQUEST

PAGE TITLE: UHB PAD LAT (24)

Apple Inc.

DRAWING NUMBER: 051-12836 | SIZE: D

REVISION: 4.0.0

BRANCH: proto-2

PAGE: 24 OF 49

SHEET: 61 OF 100

NOTICE OF PROPRIETARY PROPERTY:
THE INFORMATION CONTAINED HEREIN IS THE PROPRIETARY PROPERTY OF APPLE INC.
THE POSESSOR AGREES TO THE FOLLOWING:
I TO MAINTAIN THIS DOCUMENT IN CONFIDENCE
II NOT TO REPRODUCE OR COPY IT
III NOT TO REVEAL OR PUBLISH IT IN WHOLE OR PART
IV ALL RIGHTS RESERVED

LB DIVERSITY MODULE

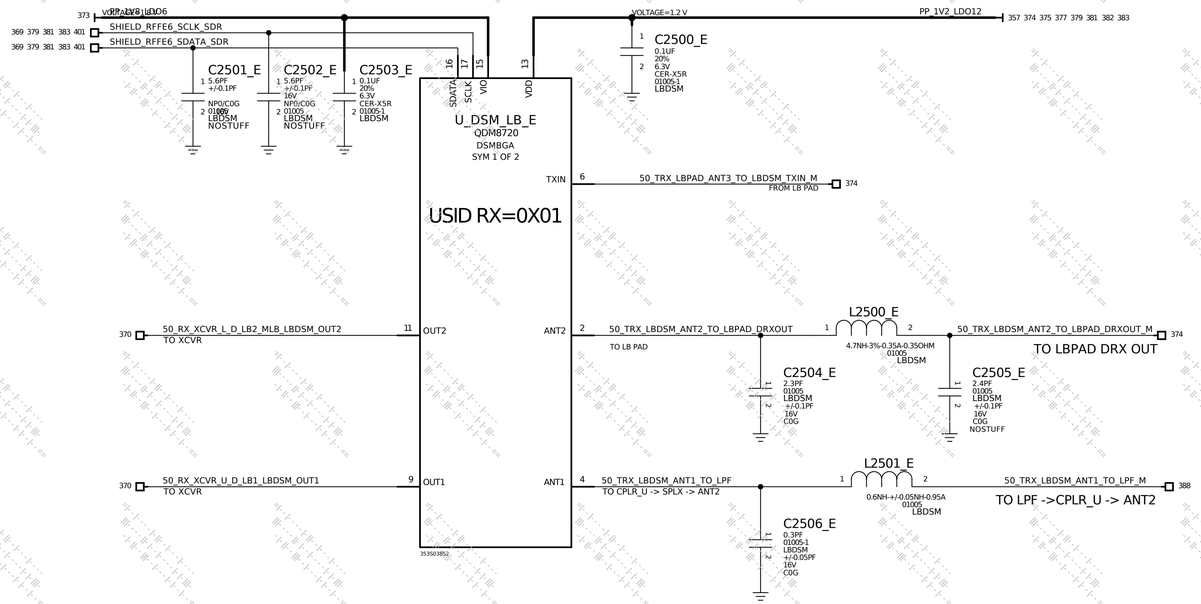

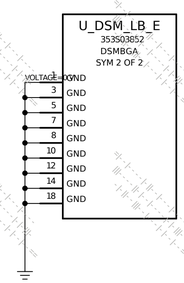

COMMA SEPARATED	NET RULE ASSIGNMENT	
	CONSTRAINT SET	COMMA SEPARATED NET NAMES (WILDCARD SUPPORT EX: DDR*)
P	A_PWR_100MA	VDD_LB_DSM

CLASS DEFINITIONS			COMMA SEPARATED WITH WILDCARD SUPPORT: NET NAMES EX: DDR*	CLEAR OVERRIDE
CLASS NAME	COMMA SEPARATED	CONSTRAINT SET	DP NAMES EX: DP:DP_AA*,DP_BB* (LINE STARTS WITH FLAG DP:)	Y/N
P_50_RX_THIN	P	A_50_THIN_SE	50_RX_LBDSM_RXOUT*	N
P_50_TRX_WIDE	P	A_50_WIDE_SE	50_TRX_LBDSM*	N

CLASS DEFINITIONS			COMMA SEPARATED WITH WILDCARD SUPPORT: NET NAMES EX: DDR*	CLEAR OVERRIDE
CLASS NAME	COMMA SEPARATED	CONSTRAINT SET	DP NAMES EX: DP:DP_AA*,DP_BB* (LINE STARTS WITH FLAG DP:)	Y/N
S_50_RX_THIN	S	A_DIELECTRIC_4XV_50_THIN_SE	50_RX_LBDSM_RXOUT*	N
S_50_TRX_WIDE	S	A_DIELECTRIC_4XV_50_THIN_SE	50_TRX_LBDSM_ANT1*	N

CONFIDENTIAL AND PROPRIETARY APPLE SYSTEM DESIGN. FOR REFERENCE ONLY - NOT A CHANGE REQUEST

PAGE TITLE
LB DSM (25)

Apple Inc.

NOTICE OF PROPRIETARY PROPERTY:
THE INFORMATION CONTAINED HEREIN IS THE PROPRIETARY PROPERTY OF APPLE INC. THE POSESSOR AGREES TO THE FOLLOWING:
I TO MAINTAIN THIS DOCUMENT IN CONFIDENCE
II NOT TO REPRODUCE OR COPY IT
III NOT TO REVEAL OR PUBLISH IT IN WHOLE OR PART
IV ALL RIGHTS RESERVED

DRAWING NUMBER 051-12836
SIZE D
REVISION 4.0.0
BRANCH proto-2
PAGE 25 OF 49
SHEET 62 OF 100

TX RECEIVE DIVERSITY MODULE

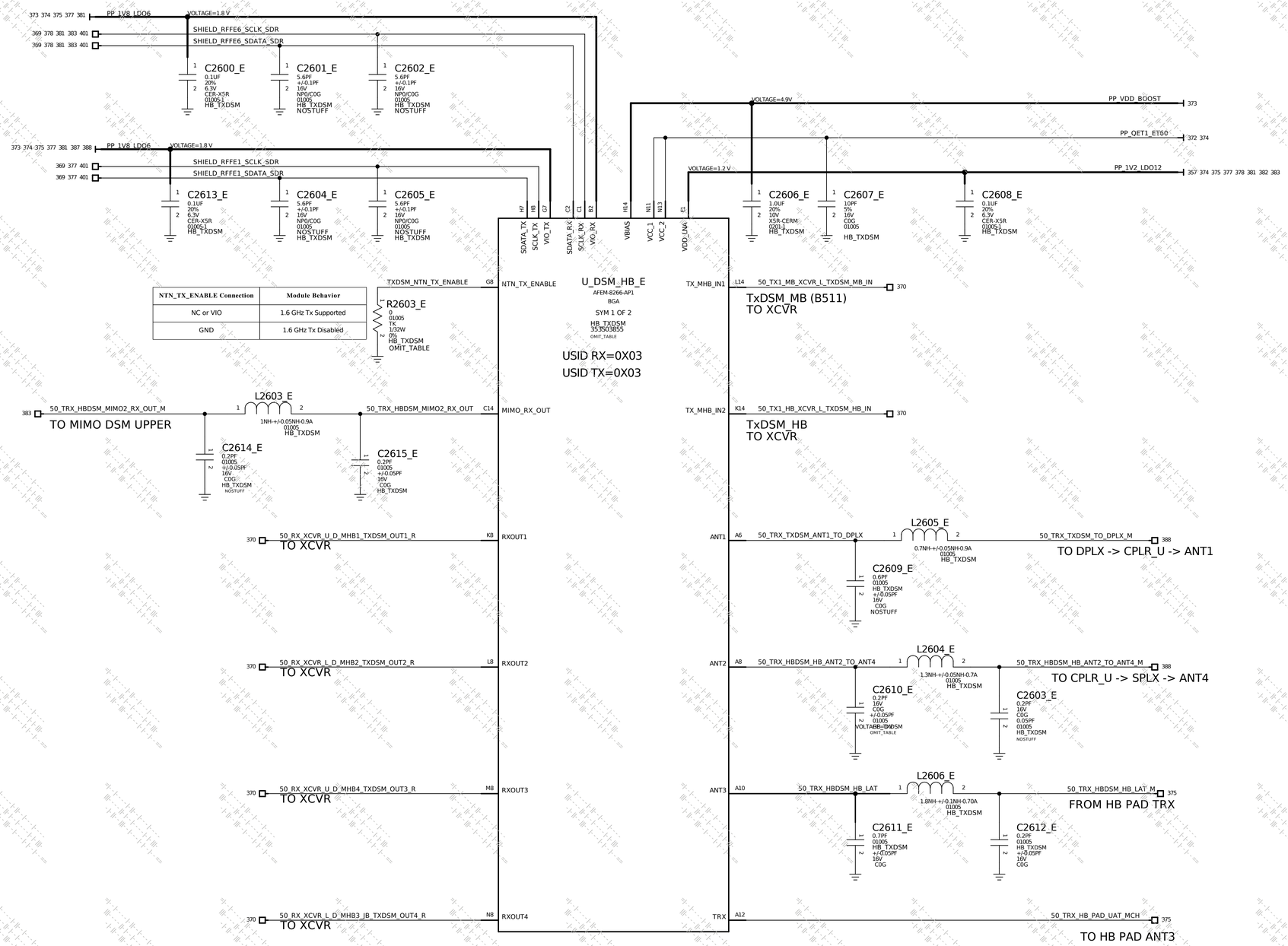

NTN_TX_ENABLE Connection	Module Behavior
NC or VIO	1.6 GHz Tx Supported
GND	1.6 GHz Tx Disabled

CONFIDENTIAL AND PROPRIETARY APPLE SYSTEM DESIGN. FOR REFERENCE ONLY - NOT A CHANGE REQUEST

PAGE TITLE: HB TXDSM (26)

Apple Inc.

DRAWING NUMBER: 051-12836 | SIZE: D

REVISION: 4.0.0

BRANCH: proto-2

PAGE: 26 OF 49

SHEET: 63 OF 100

NOTICE OF PROPRIETARY PROPERTY:
THE INFORMATION CONTAINED HEREIN IS THE PROPRIETARY PROPERTY OF APPLE INC.
THE POSESSOR AGREES TO THE FOLLOWING:
I TO MAINTAIN THIS DOCUMENT IN CONFIDENCE
II NOT TO REPRODUCE OR COPY IT
III NOT TO REVEAL OR PUBLISH IT IN WHOLE OR PART
IV ALL RIGHTS RESERVED

TX RECEIVE DIVERSITY MODULE GND

CLASS DEFINITIONS			COMMA SEPARATED WITH WILDCARD SUPPORT: NET NAMES EX: DDR* DP NAMES EX: DP:DP_AA*,DP_BB* (LINE STARTS WITH FLAG DP:)	CLEAR OVERWRITE Y/N
CLASS NAME	...	CONSTRAINT SET		
P_50_TX_THIN	P	A_50_THIN_SE	50_TX_IN_TX1*,50_RX_MB_MB_PORTB	N
P_50_RX_THIN	P	A_50_THIN_SE	50_RX_HBDSM_RXOUT_DRX*	N
P_50_TRX_WIDE	P	A_50_WIDE_SE	50_TRX_HBDSM_HB_ANT1*	N
P_50_TRX_WIDE	P	A_50_WIDE_SE	50_TRX_HBDSM_HB_ANT2*	N
P_50_TRX_WIDE	P	A_50_WIDE_SE	50_TRX_HBDSM_MIMO2_RX*	N

CLASS DEFINITIONS			COMMA SEPARATED WITH WILDCARD SUPPORT: NET NAMES EX: DDR* DP NAMES EX: DP:DP_AA*,DP_BB* (LINE STARTS WITH FLAG DP:)	CLEAR OVERWRITE Y/N
CLASS NAME	...	CONSTRAINT SET		
S_50_TX_THIN	S	A_DIELECTRIC_4XV_50_THIN_SE	50_TX_IN_TX1*,50-RX_MB_MB_PORTB	N
S_50_RX_THIN	S	A_DIELECTRIC_4XV_50_THIN_SE	50_RX_HBDSM_RXOUT_DRX*	N
S_50_TRX_WIDE	S	A_DIELECTRIC_4XV_50_THIN_SE	50_TRX_HBDSM_HB_ANT1*	N
S_50_TRX_WIDE	S	A_DIELECTRIC_4XV_50_THIN_SE	50_TRX_HBDSM_HB_ANT2*	N
S_50_TRX_WIDE	S	A_DIELECTRIC_4XV_50_THIN_SE	50_TRX_HBDSM_MIMO2_RX*	N

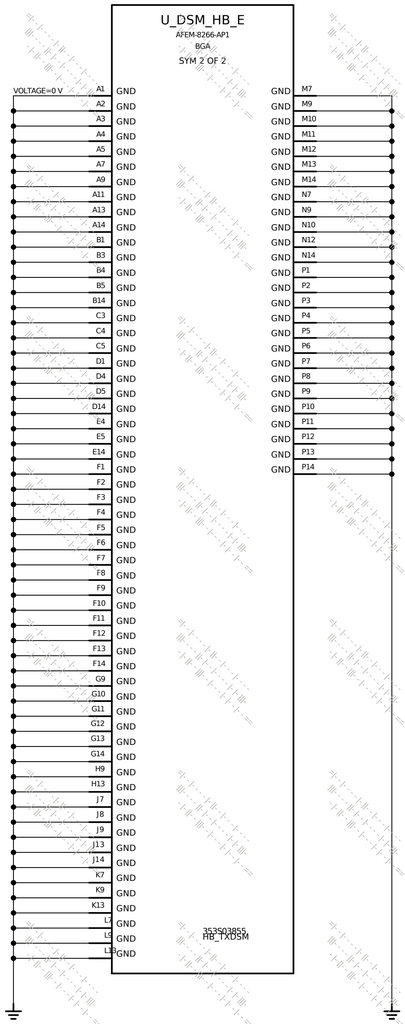

PAGE TITLE	HB TXDSDM GND (27)
Apple Inc.	DRAWING NUMBER 051-12836 / SIZE D
	REVISION 4.0.0
	BRANCH proto-2
	PAGE 27 OF 49
	SHEET 64 OF 100

NOTICE OF PROPRIETARY PROPERTY:
THE INFORMATION CONTAINED HEREIN IS THE PROPRIETARY PROPERTY OF APPLE INC.
THE POSESSOR AGREES TO THE FOLLOWING:
I TO MAINTAIN THIS DOCUMENT IN CONFIDENCE
II NOT TO REPRODUCE OR COPY IT
III NOT TO REVEAL OR PUBLISH IT IN WHOLE OR PART
IV ALL RIGHTS RESERVED

CONFIDENTIAL AND PROPRIETARY APPLE SYSTEM DESIGN. FOR REFERENCE ONLY - NOT A CHANGE REQUEST

UHB PAD UAT

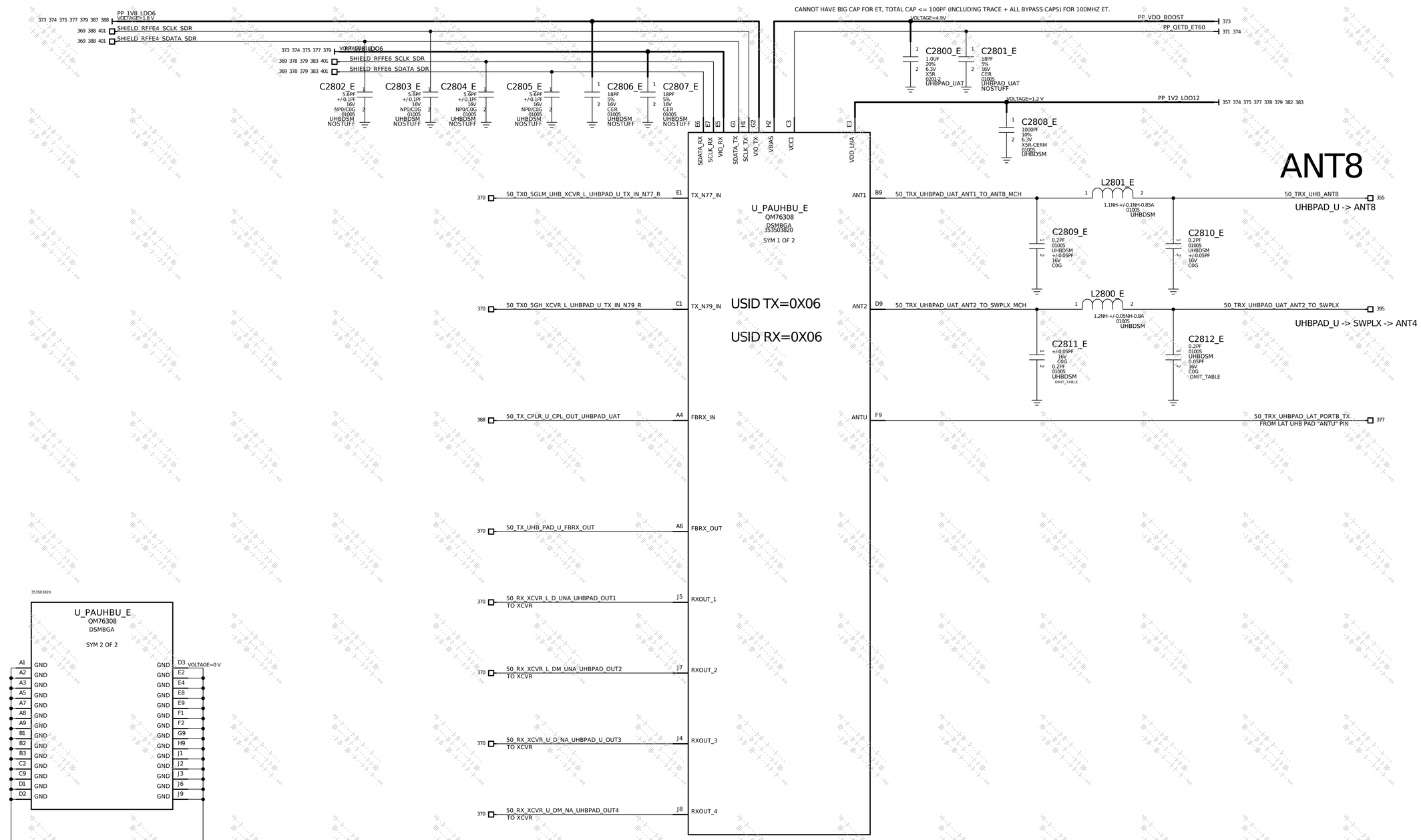

CONFIDENTIAL AND PROPRIETARY APPLE SYSTEM DESIGN. FOR REFERENCE ONLY - NOT A CHANGE REQUEST

PAGE TITLE	UHB PAD UAT (28)
Apple Inc.	
DRAWING NUMBER	051-12836
SIZE	D
REVISION	4.0.0
BRANCH	proto-2
PAGE	28 OF 49
SHEET	65 OF 100

NOTICE OF PROPRIETARY PROPERTY:
THE INFORMATION CONTAINED HEREIN IS THE PROPRIETARY PROPERTY OF APPLE INC.
THE POSESSOR AGREES TO THE FOLLOWING:
I TO MAINTAIN THIS DOCUMENT IN CONFIDENCE
II NOT TO REPRODUCE OR COPY IT
III NOT TO REVEAL OR PUBLISH IT IN WHOLE OR PART
IV ALL RIGHTS RESERVED

LOWER MIMO DIVERSITY MODULE

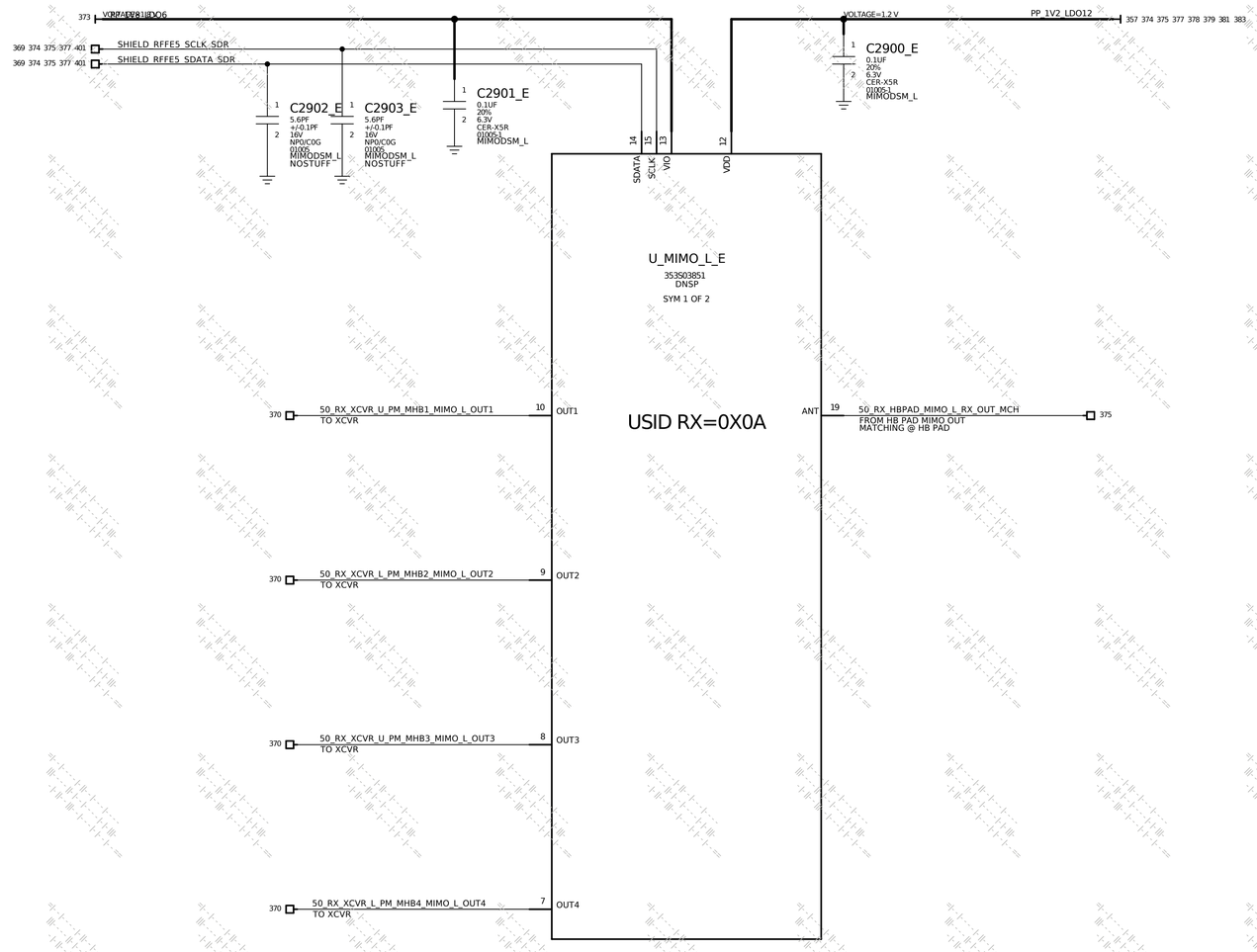

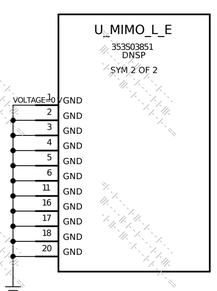

CLASS DEFINITIONS			COMMA SEPARATED WITH WILDCARD SUPPORT: NET NAMES EX: DDR*	CLEAR ORANGE
CLASS NAME	...	CONSTRAINT SET	DP NAMES EX: DP:DP_AA*,DP_BB* (LINE STARTS WITH FLAG DP:)	Y/N
P_50_RX_THIN	P	A_50_THIN_SE	50_RX_MIMO1_RXOUT_DRX*	N

CLASS DEFINITIONS			COMMA SEPARATED WITH WILDCARD SUPPORT: NET NAMES EX: DDR*	CLEAR ORANGE
CLASS NAME	...	CONSTRAINT SET	DP NAMES EX: DP:DP_AA*,DP_BB* (LINE STARTS WITH FLAG DP:)	Y/N
S_50_RX_THIN	S	A_DIELECTRIC_4XV_50_THIN_SE	50_RX_MIMO1_RXOUT_DRX*	N

CONFIDENTIAL AND PROPRIETARY APPLE SYSTEM DESIGN. FOR REFERENCE ONLY - NOT A CHANGE REQUEST

PAGE TITLE: MIMO DSM LOWER (29)

Apple Inc.

DRAWING NUMBER: 051-12836 | SIZE: D

REVISION: 4.0.0

BRANCH: proto-2

PAGE: 29 OF 49

SHEET: 66 OF 100

NOTICE OF PROPRIETARY PROPERTY:
THE INFORMATION CONTAINED HEREIN IS THE PROPRIETARY PROPERTY OF APPLE INC.
THE POSESSOR AGREES TO THE FOLLOWING:
I TO MAINTAIN THIS DOCUMENT IN CONFIDENCE
II NOT TO REPRODUCE OR COPY IT
III NOT TO REVEAL OR PUBLISH IT IN WHOLE OR PART
IV ALL RIGHTS RESERVED

UPPER MIMO DIVERSITY MODULE

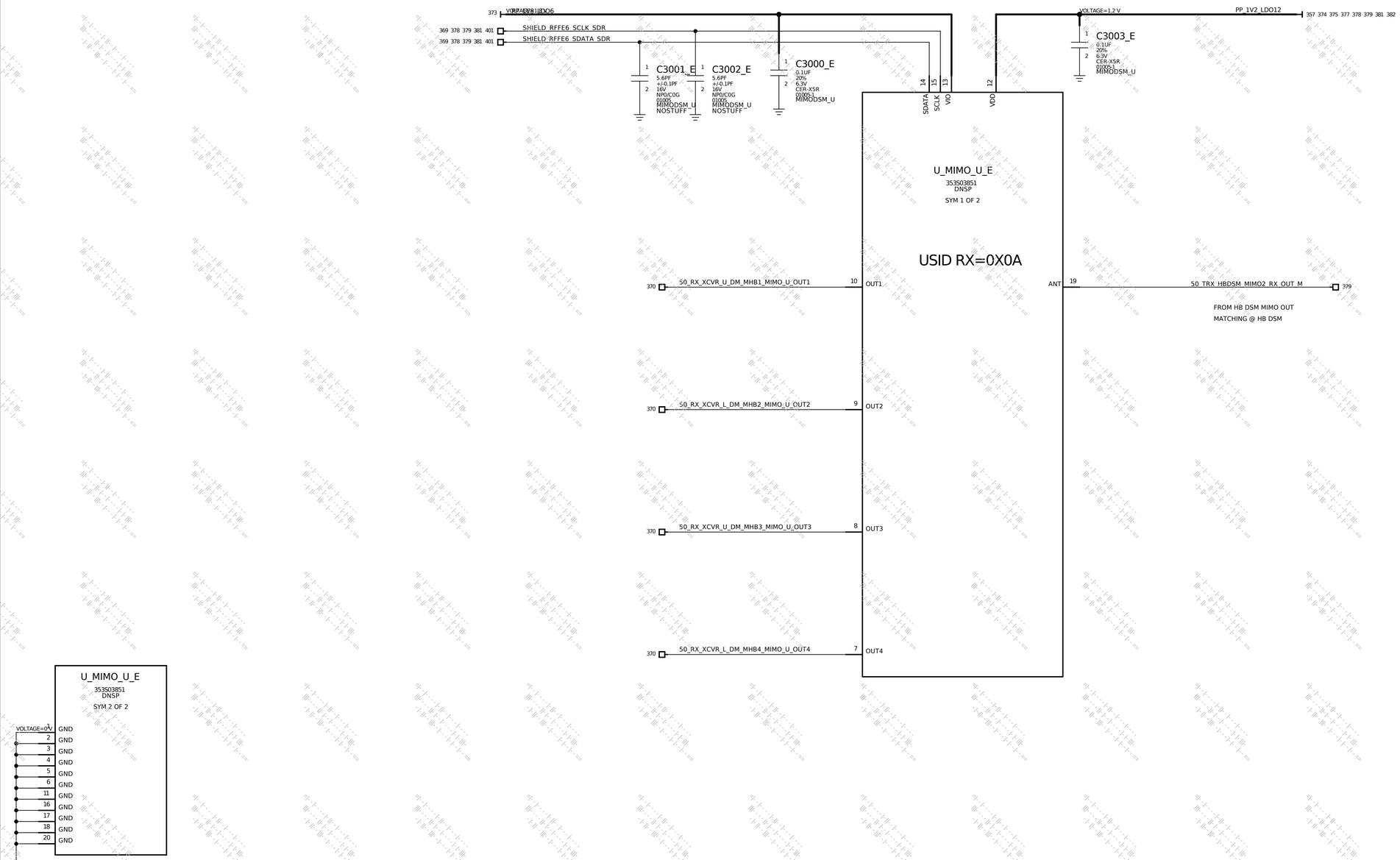

CLASS DEFINITIONS			COMMA SEPARATED WITH WILDCARD SUPPORT: NET NAMES EX: DDR*	CLEAR CHANGE
CLASS NAME	...	CONSTRAINT SET	DP NAMES EX: DP:DP_AA*,DP_BB* (LINE STARTS WITH FLAG DP:)	Y/N
P_50_RX_THIN	P	A_50_THIN_SE	50_RX_MIMO2_RXOUT_DRX*	N

CLASS DEFINITIONS			COMMA SEPARATED WITH WILDCARD SUPPORT: NET NAMES EX: DDR*	CLEAR CHANGE
CLASS NAME	...	CONSTRAINT SET	DP NAMES EX: DP:DP_AA*,DP_BB* (LINE STARTS WITH FLAG DP:)	Y/N
S_50_RX_THIN	S	TBL_CLASS_CNS_SET=A_DIELECTRIC_4XV_50_THIN_SE	50_RX_MIMO2_RXOUT_DRX*	N

CONFIDENTIAL AND PROPRIETARY APPLE SYSTEM DESIGN. FOR REFERENCE ONLY - NOT A CHANGE REQUEST

PAGE TITLE: MIMO DSM UPPER (30)

Apple Inc.

DRAWING NUMBER: 051-12836 | SIZE: D

REVISION: 4.0.0

BRANCH: proto-2

PAGE: 30 OF 49

SHEET: 67 OF 100

NOTICE OF PROPRIETARY PROPERTY:
THE INFORMATION CONTAINED HEREIN IS THE PROPRIETARY PROPERTY OF APPLE INC.
THE POSESSOR AGREES TO THE FOLLOWING:
I TO MAINTAIN THIS DOCUMENT IN CONFIDENCE
II NOT TO REPRODUCE OR COPY IT
III NOT TO REVEAL OR PUBLISH IT IN WHOLE OR PART
IV ALL RIGHTS RESERVED

DISCRETE GNSS

Note:
- stand-in WLCSP4 LDO for placement only, still looking for PoR one
- Cin/Cout values TBD with PoR LDO
- EN to be tied to IN if the function is not required per Datasheet
- Might need to add 1-2 ext. LDO resistor depending on the LDO

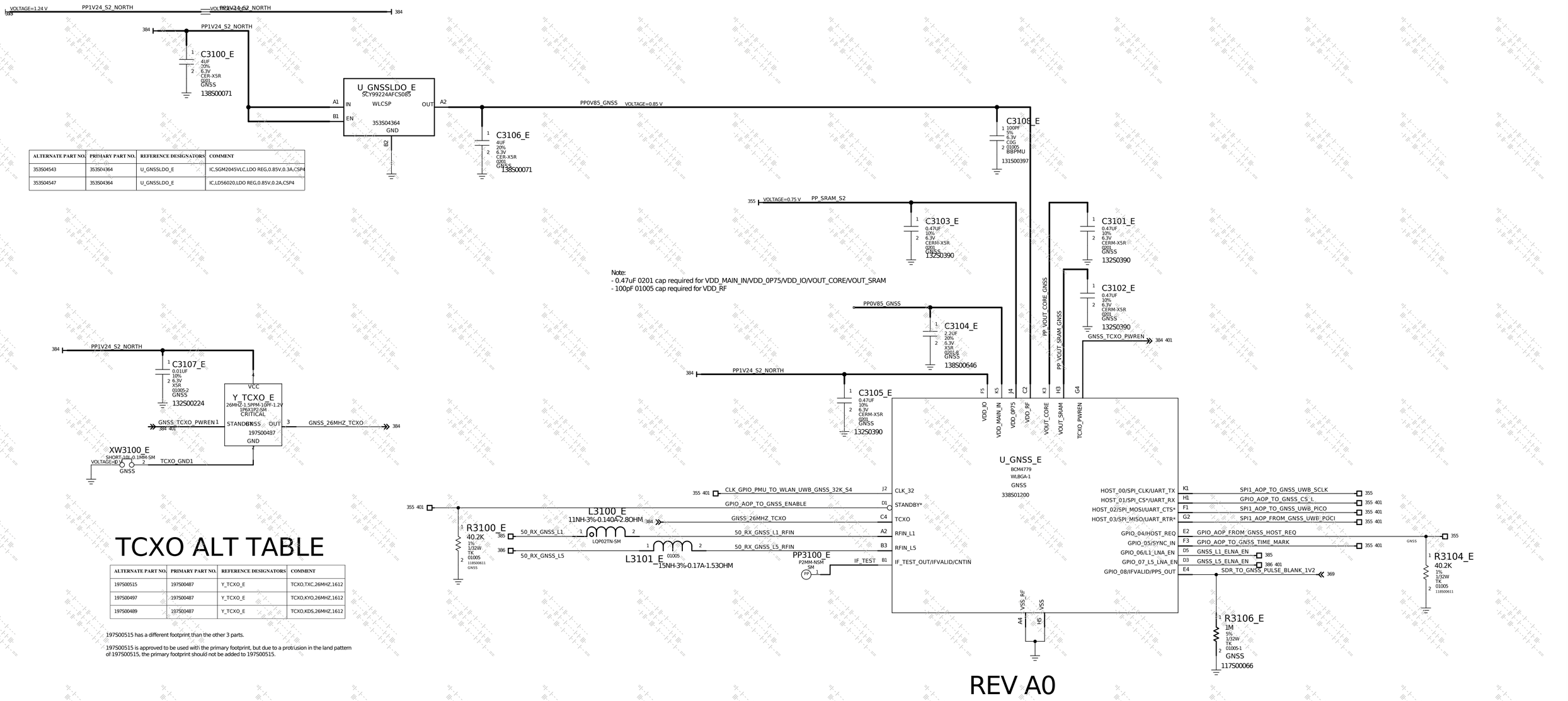

ALTERNATE PART NO.	PRIMARY PART NO.	REFERENCE DESIGNATORS	COMMENT
353S04543	353S04364	U_GNSSLDO_E	IC,SGM2045VLC,LDO REG,0.85V,0.3A,CSP4
353S04547	353S04364	U_GNSSLDO_E	IC,LD56020,LDO REG,0.85V,0.2A,CSP4

Note:
- 0.47uF 0201 cap required for VDD_MAIN_IN/VDD_0P75/VDD_IO/VOUT_CORE/VOUT_SRAM
- 100pF 01005 cap required for VDD_RF

TCXO ALT TABLE

ALTERNATE PART NO.	PRIMARY PART NO.	REFERENCE DESIGNATORS	COMMENT
197S00515	197S00487	Y_TCXO_E	TCXO,TXC,26MHZ,1612
197S00497	197S00487	Y_TCXO_E	TCXO,KYO,26MHZ,1612
197S00489	197S00487	Y_TCXO_E	TCXO,KDS,26MHZ,1612

197S00515 has a different footprint than the other 3 parts.

197S00515 is approved to be used with the primary footprint, but due to a protrusion in the land pattern of 197S00515, the primary footprint should not be added to 197S00515.

REV A0

CONFIDENTIAL AND PROPRIETARY APPLE SYSTEM DESIGN. FOR REFERENCE ONLY - NOT A CHANGE REQUEST

PAGE TITLE: DISCRETE GNSS (31)

Apple Inc.

DRAWING NUMBER: 051-12836 | SIZE: D

REVISION: 4.0.0

BRANCH: proto-2

PAGE: 31 OF 49

SHEET: 68 OF 100

NOTICE OF PROPRIETARY PROPERTY:
THE INFORMATION CONTAINED HEREIN IS THE PROPRIETARY PROPERTY OF APPLE INC.
THE POSESSOR AGREES TO THE FOLLOWING:
I TO MAINTAIN THIS DOCUMENT IN CONFIDENCE
II NOT TO REPRODUCE OR COPY IT
III NOT TO REVEAL OR PUBLISH IT IN WHOLE OR PART
IV ALL RIGHTS RESERVED

GNSS_L1

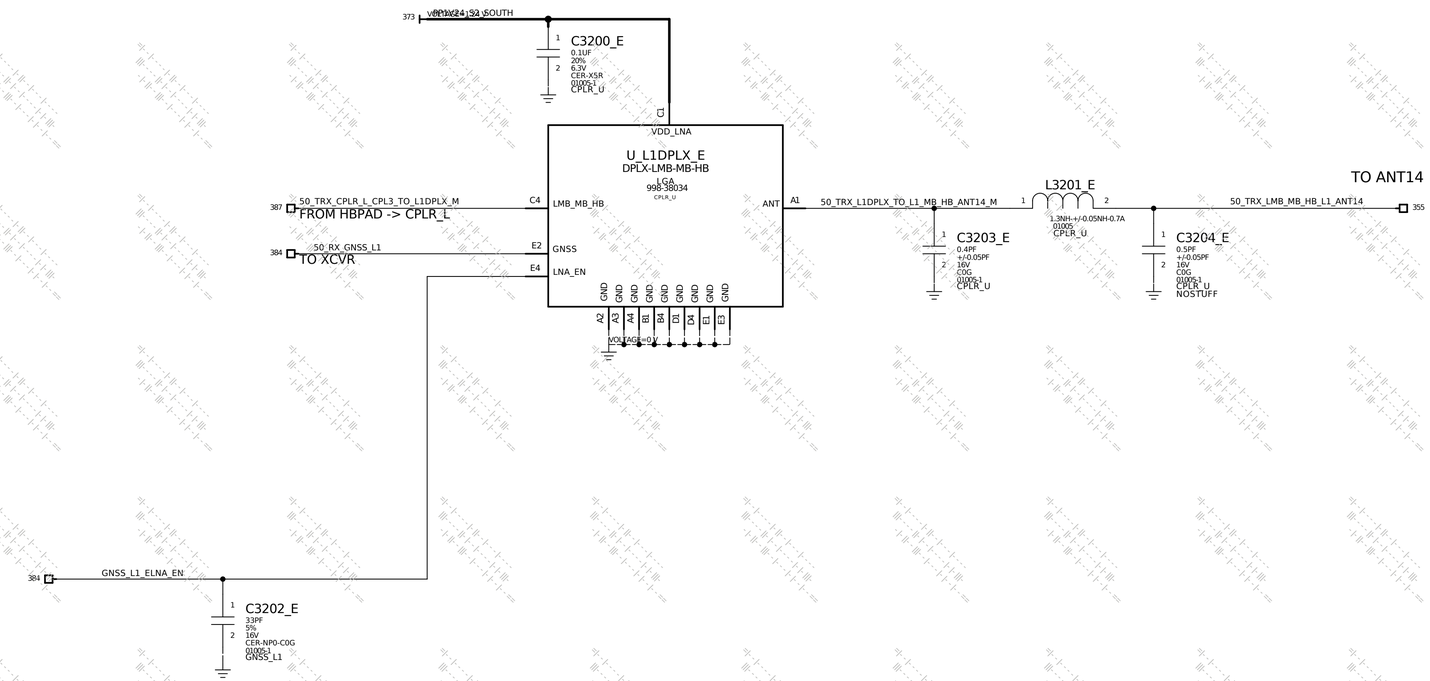

CLASS DEFINITIONS			COMMA SEPARATED WITH WILDCARD SUPPORT: NET NAMES EX: DDR*	CLEAR OVERRIDE
CLASS NAME		CONSTRAINT SET	DP NAMES EX: DP:DP_AA*,DP_BB* (LINE STARTS WITH FLAG DP:)	Y/N
S_50_TRX_THIN	S	A_DIELECTRIC_4XV_50_THIN_SE	50_RX_L1_LNA_OUT	N
S_50_TRX_THIN	S	A_DIELECTRIC_4XV_50_THIN_SE	50_L1_LNA_NOTCH2	N

CLASS DEFINITIONS			COMMA SEPARATED WITH WILDCARD SUPPORT: NET NAMES EX: DDR*	CLEAR OVERRIDE
CLASS NAME		CONSTRAINT SET	DP NAMES EX: DP:DP_AA*,DP_BB* (LINE STARTS WITH FLAG DP:)	Y/N
P_50_RX_THIN	P	A_50_THIN_SE	50_RX_L1_LNA_OUT	N
P_50_RX_THIN	P	A_50_THIN_SE	50_L1_LNA_NOTCH2	N

CONFIDENTIAL AND PROPRIETARY APPLE SYSTEM DESIGN. FOR REFERENCE ONLY - NOT A CHANGE REQUEST

PAGE TITLE: GNSS_L1 (32)

Apple Inc.

DRAWING NUMBER: 051-12836 | SIZE: D

REVISION: 4.0.0

BRANCH: proto-2

PAGE: 32 OF 49

SHEET: 69 OF 100

NOTICE OF PROPRIETARY PROPERTY:
THE INFORMATION CONTAINED HEREIN IS THE PROPRIETARY PROPERTY OF APPLE INC.
THE POSESSOR AGREES TO THE FOLLOWING:
I TO MAINTAIN THIS DOCUMENT IN CONFIDENCE
II NOT TO REPRODUCE OR COPY IT
III NOT TO REVEAL OR PUBLISH IT IN WHOLE OR PART
IV ALL RIGHTS RESERVED

GNSS_L5

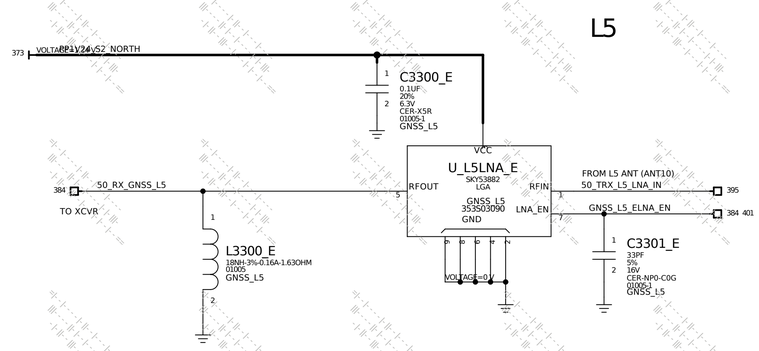

CLASS DEFINITIONS			COMMA SEPARATED WITH WILDCARD SUPPORT: NET NAMES EX: DDR*	CLEAR OVERRIDE
CLASS NAME	CLASS TYPE	CONSTRAINT SET	DP NAMES EX: DP:DP_AA*,DP_BB* (LINE STARTS WITH FLAG DP:)	Y/N
S_50_TRX_THIN	S	A_DIELECTRIC_4XV_50_THIN_SE	50_RX_L5_LNA_OUT	N
S_50_TRX_THIN	S	A_DIELECTRIC_4XV_50_THIN_SE	50_L5_LNA_NOTCH2	N
S_50_TRX_WIDE	S	A_DIELECTRIC_4XV_50_THIN_SE	50_TRX_L5_LNA_IN	N

CLASS DEFINITIONS			COMMA SEPARATED WITH WILDCARD SUPPORT: NET NAMES EX: DDR*	CLEAR OVERRIDE
CLASS NAME	CLASS TYPE	CONSTRAINT SET	DP NAMES EX: DP:DP_AA*,DP_BB* (LINE STARTS WITH FLAG DP:)	Y/N
P_50_RX_THIN	P	A_50_THIN_SE	50_RX_L5_LNA_OUT	N
P_50_RX_THIN	P	A_50_THIN_SE	50_L5_LNA_NOTCH2	N
P_50_TRX_WIDE	P	A_50_WIDE_SE	50_TRX_L5_LNA_IN	N

CONFIDENTIAL AND PROPRIETARY APPLE SYSTEM DESIGN. FOR REFERENCE ONLY - NOT A CHANGE REQUEST

PAGE TITLE
GNSS_L5 (33)

Apple Inc.

DRAWING NUMBER 051-12836
SIZE D
REVISION 4.0.0
BRANCH proto-2
PAGE 33 OF 49
SHEET 70 OF 100

NOTICE OF PROPRIETARY PROPERTY:
THE INFORMATION CONTAINED HEREIN IS THE PROPRIETARY PROPERTY OF APPLE INC.
THE POSESSOR AGREES TO THE FOLLOWING:
I TO MAINTAIN THIS DOCUMENT IN CONFIDENCE
II NOT TO REPRODUCE OR COPY IT
III NOT TO REVEAL OR PUBLISH IT IN WHOLE OR PART
IV ALL RIGHTS RESERVED

LOWER COUPLER

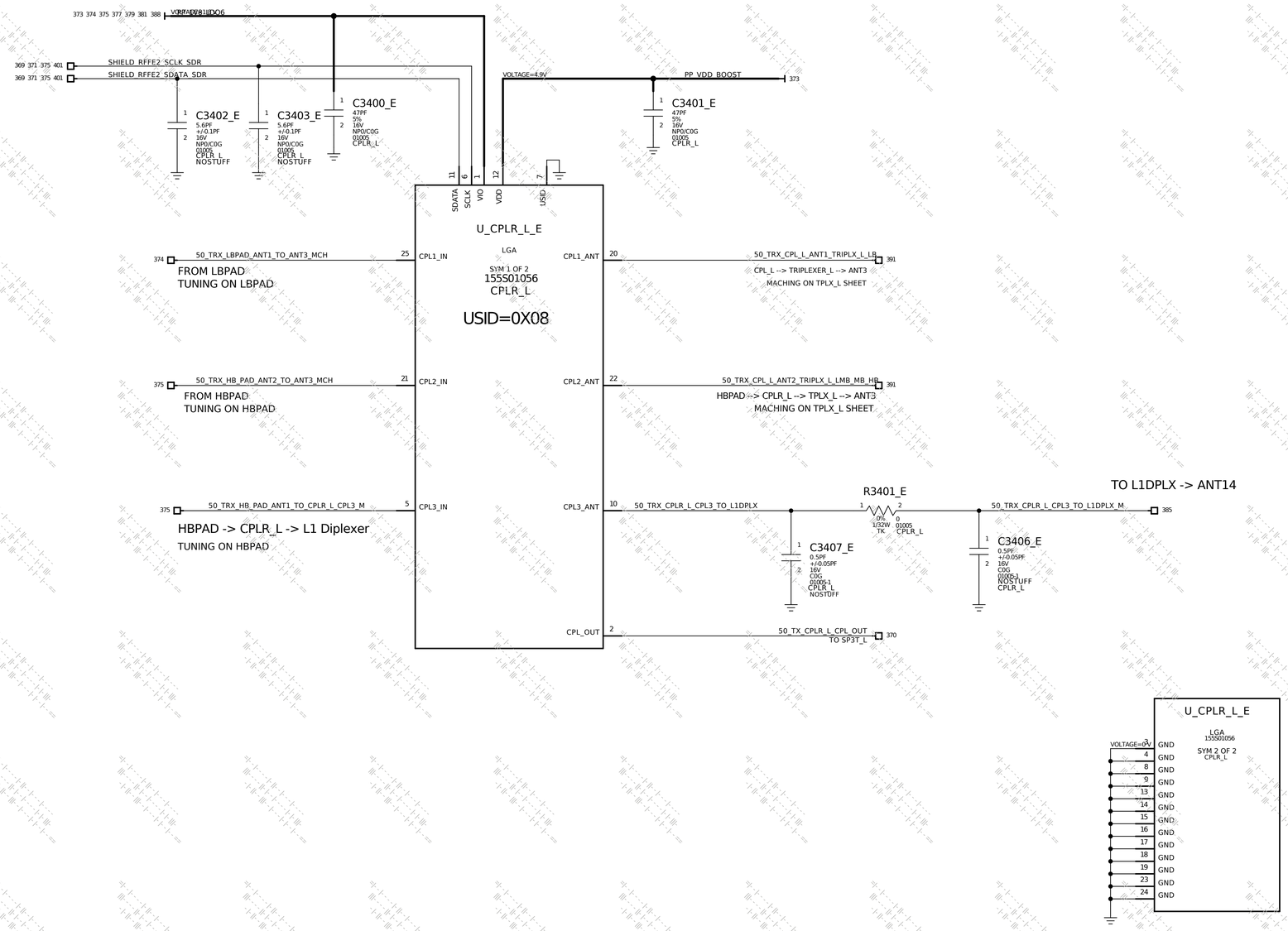

CLASS DEFINITIONS			COMMA SEPARATED WITH WILDCARD SUPPORT: NET NAMES EX: DDR* DP NAMES EX: DP:DP_AA*,DP_BB* (LINE STARTS WITH FLAG DP:)	CLEAR OVERRIDE Y/N
CLASS NAME	...	CONSTRAINT SET		
S_50_TRX_WIDE	S	A_DIELECTRIC_4XV_50_THIN_SE	50_TRX_DPLX_LB_LMB_MB_HB_ANT1	N
S_50_TRX_THIN	S	A_DIELECTRIC_4XV_50_THIN_SE	50_TRX_CPLR_L_CPL1_IN_LB_LMB_MB_HB	N
S_50_TRX_WIDE	S	A_DIELECTRIC_4XV_50_THIN_SE	50_TRX_CPLR_L_CPL1_ANT_LB_LMB_MB_HB	N
S_50_TRX_WIDE	S	A_DIELECTRIC_4XV_50_THIN_SE	50_TRX_CPLR_L_CPL2*	N
S_50_TRX_WIDE	S	A_DIELECTRIC_4XV_50_THIN_SE	50_TRX_ANT1_LB_LMB_MB_HB	N

CLASS DEFINITIONS			COMMA SEPARATED WITH WILDCARD SUPPORT: NET NAMES EX: DDR* DP NAMES EX: DP:DP_AA*,DP_BB* (LINE STARTS WITH FLAG DP:)	CLEAR OVERRIDE Y/N
CLASS NAME	...	CONSTRAINT SET		
P_50_TRX_WIDE	P	A_50_WIDE_SE	50_TRX_DPLX_LB_LMB_MB_HB_ANT1	N
P_50_TRX_WIDE	P	A_50_WIDE_SE	50_TRX_CPLR_L_CPL1*	N
P_50_TRX_WIDE	P	A_50_WIDE_SE	50_TRX_CPLR_L_CPL2*	N
P_50_TRX_WIDE	P	A_50_WIDE_SE	50_TRX_ANT1_LB_LMB_MB_HB	N

CONFIDENTIAL AND PROPRIETARY APPLE SYSTEM DESIGN. FOR REFERENCE ONLY - NOT A CHANGE REQUEST

PAGE TITLE
COUPLER LOWER (34)

Apple Inc.

DRAWING NUMBER 051-12836
SIZE D
REVISION 4.0.0
BRANCH proto-2
PAGE 34 OF 49
SHEET 71 OF 100

NOTICE OF PROPRIETARY PROPERTY:
THE INFORMATION CONTAINED HEREIN IS THE PROPRIETARY PROPERTY OF APPLE INC.
THE POSESSOR AGREES TO THE FOLLOWING:
I TO MAINTAIN THIS DOCUMENT IN CONFIDENCE
II NOT TO REPRODUCE OR COPY IT
III NOT TO REVEAL OR PUBLISH IT IN WHOLE OR PART
IV ALL RIGHTS RESERVED

UPPER COUPLER

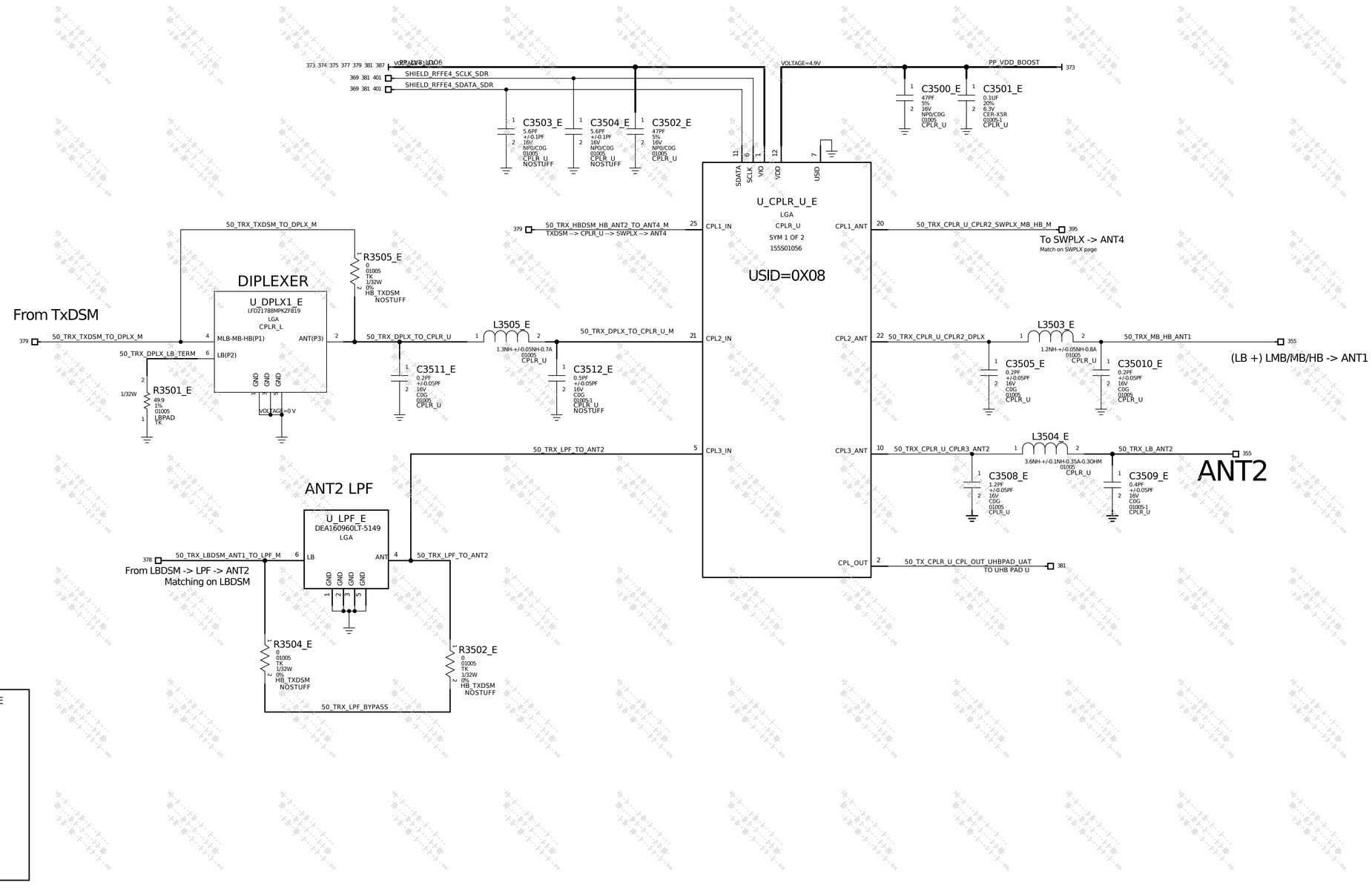

CLASS DEFINITIONS			COMMA SEPARATED WITH WILDCARD SUPPORT: NET NAMES EX: DDR*	CLEAR OVERRIDE
CLASS NAME	...	CONSTRAINT SET	DP NAMES EX: DP:DP_AA*,DP_BB* (LINE STARTS WITH FLAG DP:)	Y/N
P_50_TRX_WIDE	P	A_50_WIDE_SE	50_TRX_L1_LNA*,50_L1_LNA_NOTCH1	N
P_50_TRX_WIDE	P	A_50_WIDE_SE	50_TRX_TPLX_ANT_LB_LMB_MB_HB_L1	N
P_50_TRX_WIDE	P	A_50_WIDE_SE	50_TRX_CPLR_U_CPL1*	N
P_50_TRX_WIDE	P	A_50_WIDE_SE	50_TRX_CPLR_U_CPL2*	N

CLASS DEFINITIONS			COMMA SEPARATED WITH WILDCARD SUPPORT: NET NAMES EX: DDR*	CLEAR OVERRIDE
CLASS NAME	...	CONSTRAINT SET	DP NAMES EX: DP:DP_AA*,DP_BB* (LINE STARTS WITH FLAG DP:)	Y/N
S_50_TRX_WIDE	S	A_DIELECTRIC_4XV_50_THIN_SE	50_TRX_L1_LNA*,50_L1_LNA_NOTCH1	N
S_50_TRX_WIDE	S	A_DIELECTRIC_4XV_50_THIN_SE	50_TRX_TPLX_ANT_LB_LMB_MB_HB_L1	N
S_50_TRX_WIDE	S	A_DIELECTRIC_4XV_50_THIN_SE	50_TRX_CPLR_U_CPL1*	N
S_50_TRX_WIDE	S	A_DIELECTRIC_4XV_50_THIN_SE	50_TRX_CPLR_U_CPL2*	N
S_50_TRX_WIDE	S	A_DIELECTRIC_4XV_50_THIN_SE	50_TRX_ANT2_LB_LMB_MB_HB_L1	N

CONFIDENTIAL AND PROPRIETARY APPLE SYSTEM DESIGN. FOR REFERENCE ONLY - NOT A CHANGE REQUEST

PAGE TITLE: COUPLER UPPER (35)

Apple Inc.

DRAWING NUMBER: 051-12836 SIZE: D

REVISION: 4.0.0

BRANCH: proto-2

PAGE: 35 OF 49

SHEET: 72 OF 100

NOTICE OF PROPRIETARY PROPERTY:
THE INFORMATION CONTAINED HEREIN IS THE PROPRIETARY PROPERTY OF APPLE INC.
THE POSESSOR AGREES TO THE FOLLOWING:
I TO MAINTAIN THIS DOCUMENT IN CONFIDENCE
II NOT TO REPRODUCE OR COPY IT
III NOT TO REVEAL OR PUBLISH IT IN WHOLE OR PART
IV ALL RIGHTS RESERVED

BLANK (RESERVED)

CONFIDENTIAL AND PROPRIETARY APPLE SYSTEM DESIGN. FOR REFERENCE ONLY - NOT A CHANGE REQUEST

PAGE TITLE
BLANK (36)

Apple Inc.

DRAWING NUMBER 051-12836
SIZE D
REVISION 4.0.0
BRANCH proto-2
PAGE 36 OF 49
SHEET 73 OF 100

NOTICE OF PROPRIETARY PROPERTY:
THE INFORMATION CONTAINED HEREIN IS THE PROPRIETARY PROPERTY OF APPLE INC.
THE POSESSOR AGREES TO THE FOLLOWING:
I TO MAINTAIN THIS DOCUMENT IN CONFIDENCE
II NOT TO REPRODUCE OR COPY IT
III NOT TO REVEAL OR PUBLISH IT IN WHOLE OR PART
IV ALL RIGHTS RESERVED

BLANK (RESERVED)

CONFIDENTIAL AND PROPRIETARY APPLE SYSTEM DESIGN. FOR REFERENCE ONLY - NOT A CHANGE REQUEST

PAGE TITLE	BLANK (37)
	Apple Inc.
DRAWING NUMBER	051-12836
SIZE	D
REVISION	4.0.0
BRANCH	proto-2
PAGE	37 OF 49
SHEET	74 OF 100

NOTICE OF PROPRIETARY PROPERTY:

THE INFORMATION CONTAINED HEREIN IS THE PROPRIETARY PROPERTY OF APPLE INC.
THE POSESSOR AGREES TO THE FOLLOWING:
I TO MAINTAIN THIS DOCUMENT IN CONFIDENCE
II NOT TO REPRODUCE OR COPY IT
III NOT TO REVEAL OR PUBLISH IT IN WHOLE OR PART
IV ALL RIGHTS RESERVED

LOWER ANTENNA FEEDS: ANT3

UAT ANTENNAS

ANT2	ANT4	ANT6	ANT8	ANT10
LB	UHB MB/HB 2.4GHZ	5GHZ R1	UHB/N79 UWB CH9	L5 GNSS

LAT ANTENNAS

ANT1	ANT3	ANT5	ANT7	ANT9
LMB MB/HB STEWIE TX	LB MB/HB 2.4GHZ	5GHZ	UHB/N79	UHB/N79

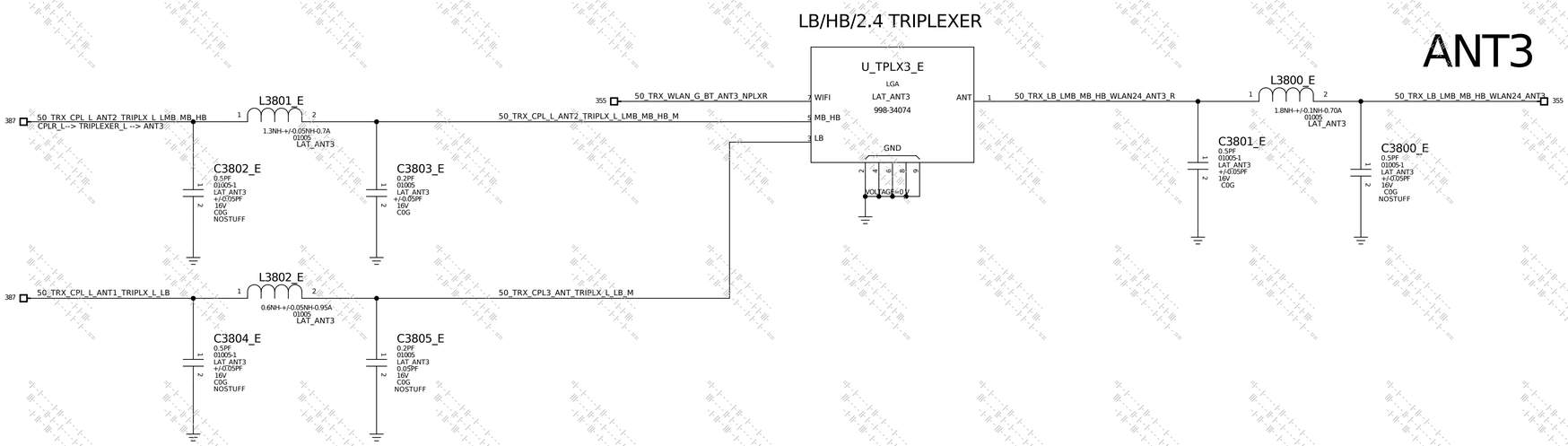

CLASS TO CLASS SPACING		
CLASS NAME	CLASS NAME	CONSTRAINT SET

CLASS DEFINITIONS			COMMA SEPARATED WITH WILDCARD SUPPORT: NET NAMES EX: DDR*	CLEAR OVERRIDE
CLASS NAME	VIAS ...	CONSTRAINT SET	DP NAMES EX: DP:DP_AA*,DP_BB* (LINE STARTS WITH FLAG DP:)	Y/N
S_50_TRX_WIDE	S	A_DIELECTRIC_4XV_50_THIN_SE	50_TRX_ANT3*,50_TRX_WLAN_G_BT_1E_TERM2	N
S_50_TRX_WIDE	S	A_DIELECTRIC_4XV_50_THIN_SE	50_L5_LNA_NOTCH1,50_TRX_ANT3_MB_HB_WLAN24_DPL	N
S_50_TRX_WIDE	S	A_DIELECTRIC_4XV_50_THIN_SE	50_TRX_WLAN_G_BT_ANT3_NPLXR	N

CLASS DEFINITIONS			COMMA SEPARATED WITH WILDCARD SUPPORT: NET NAMES EX: DDR*	CLEAR OVERRIDE
CLASS NAME	VIAS ...	CONSTRAINT SET	DP NAMES EX: DP:DP_AA*,DP_BB* (LINE STARTS WITH FLAG DP:)	Y/N
P_50_TRX_WIDE	P	A_50_WIDE_SE	50_TRX_ANT3*, 50_L5_LNA_NOTCH1	N
P_50_TRX_WIDE	P	A_50_WIDE_SE	50_TRX_WLAN_G_BT_ANT3_NPLXR,50_TRX_WLAN_G_BT_1E_TERM2	N
P_50_TRX_WIDE	P	A_50_WIDE_SE	50_TRX_ANT3_MB_HB_WLAN24_DPL	N

CONFIDENTIAL AND PROPRIETARY APPLE SYSTEM DESIGN. FOR REFERENCE ONLY - NOT A CHANGE REQUEST

PAGE TITLE: LOWER ANTENNA FEEDS_ANT1_3 (38)

Apple Inc.

DRAWING NUMBER: 051-12836 SIZE: D

REVISION: 4.0.0

BRANCH: proto-2

PAGE: 38 OF 49

SHEET: 75 OF 100

NOTICE OF PROPRIETARY PROPERTY:
THE INFORMATION CONTAINED HEREIN IS THE PROPRIETARY PROPERTY OF APPLE INC.
THE POSESSOR AGREES TO THE FOLLOWING:
I TO MAINTAIN THIS DOCUMENT IN CONFIDENCE
II NOT TO REPRODUCE OR COPY IT
III NOT TO REVEAL OR PUBLISH IT IN WHOLE OR PART
IV ALL RIGHTS RESERVED

LOWER ANTENNA FEEDS: ANT7

UAT ANTENNAS

ANT2	ANT4	ANT6	ANT8	ANT10
LB	UHB MB/HB 2.4GHZ	5GHZ R1	UHB/N79 UWB CH9	L5 GNSS

LAT ANTENNAS

ANT1	ANT3	ANT5	ANT7	ANT9
LMB MB/HB STEWIE TX	LB MB/HB 2.4GHZ	5GHZ	UHB/N79	UHB/N79

CLASS DEFINITIONS			COMMA SEPARATED WITH WILDCARD SUPPORT: NET NAMES EX: DDR*	CLEAR OVERRIDE
CLASS NAME	...	CONSTRAINT SET	DP NAMES EX: DP:DP_AA*,DP_BB* (LINE STARTS WITH FLAG DP:)	Y/N
S_50_TRX_WIDE	S	A_DIELECTRIC_4XV_50_THIN_SE	50_TRX_ANT7*,50_TRX_HB_PAD_CPL_ANT7,50_TRX_UHB_HB_TO_ANT7	N

CLASS DEFINITIONS			COMMA SEPARATED WITH WILDCARD SUPPORT: NET NAMES EX: DDR*	CLEAR OVERRIDE
CLASS NAME	...	CONSTRAINT SET	DP NAMES EX: DP:DP_AA*,DP_BB* (LINE STARTS WITH FLAG DP:)	Y/N
P_50_TRX_WIDE	P	A_50_WIDE_SE	50_TRX_ANT7*,50_TRX_HB_PAD_CPL_ANT7,50_TRX_UHB_HB_TO_ANT7	N

CONFIDENTIAL AND PROPRIETARY APPLE SYSTEM DESIGN. FOR REFERENCE ONLY - NOT A CHANGE REQUEST

PAGE TITLE: LOWER ANTENNA FEEDS_ANT7 (39)

Apple Inc.

DRAWING NUMBER: 051-12836 SIZE: D

REVISION: 4.0.0

BRANCH: proto-2

PAGE: 39 OF 49

SHEET: 76 OF 100

NOTICE OF PROPRIETARY PROPERTY:
THE INFORMATION CONTAINED HEREIN IS THE PROPRIETARY PROPERTY OF APPLE INC.
THE POSESSOR AGREES TO THE FOLLOWING:
I TO MAINTAIN THIS DOCUMENT IN CONFIDENCE
II NOT TO REPRODUCE OR COPY IT
III NOT TO REVEAL OR PUBLISH IT IN WHOLE OR PART
IV ALL RIGHTS RESERVED

LOWER ANTENNA FEEDS: ANT8

UAT ANTENNAS

ANT2	ANT4	ANT6	ANT8	ANT10
LB	UHB MB/HB 2.4GHZ	5GHZ R1	UHB/N79 UWB CH9	L5 GNSS

LAT ANTENNAS

ANT1	ANT3	ANT5	ANT7	ANT9
LMB MB/HB STEWIE TX	LB MB/HB 2.4GHZ	5GHZ	UHB/N79	UHB/N79

CLASS DEFINITIONS			COMMA SEPARATED WITH WILDCARD SUPPORT: NET NAMES EX: DDR*	CLEAR OVERRIDE
CLASS NAME	CONN TYPE	CONSTRAINT SET	DP NAMES EX: DP:DP_AA*,DP_BB* (LINE STARTS WITH FLAG DP:)	Y/N
S_50_TRX_WIDE	S	A_DIELECTRIC_4XV_50_WIDE_SE	50_TRX_ANT8*, 50_TRX_PAUHB_MATCH2_ANT8	N

CLASS DEFINITIONS			COMMA SEPARATED WITH WILDCARD SUPPORT: NET NAMES EX: DDR*	CLEAR OVERRIDE
CLASS NAME	CONN TYPE	CONSTRAINT SET	DP NAMES EX: DP:DP_AA*,DP_BB* (LINE STARTS WITH FLAG DP:)	Y/N
P_50_TRX_WIDE	P	A_50_WIDE_SE	50_TRX_ANT8*, 50_TRX_PAUHB_MATCH2_ANT8	N

NET RULE ASSIGNMENT		
CONN EXP.	CONSTRAINT SET	COMMA SEPARATED NET NAMES (WILDCARD SUPPORT EX: DDR*)
P	A_50_THIN_SE	50_FRODO*

CONFIDENTIAL AND PROPRIETARY APPLE SYSTEM DESIGN. FOR REFERENCE ONLY - NOT A CHANGE REQUEST

PAGE TITLE: LOWER ANTENNA FEEDS_ANT8 (40)

Apple Inc.

NOTICE OF PROPRIETARY PROPERTY:
THE INFORMATION CONTAINED HEREIN IS THE PROPRIETARY PROPERTY OF APPLE INC.
THE POSESSOR AGREES TO THE FOLLOWING:
I TO MAINTAIN THIS DOCUMENT IN CONFIDENCE
II NOT TO REPRODUCE OR COPY IT
III NOT TO REVEAL OR PUBLISH IT IN WHOLE OR PART
IV ALL RIGHTS RESERVED

DRAWING NUMBER	051-12836
SIZE	D
REVISION	4.0.0
BRANCH	proto-2
PAGE	40 OF 49
SHEET	77 OF 100

LOWER ANTENNA FEEDS: ANT9

UAT ANTENNAS

ANT2	ANT4	ANT6	ANT8	ANT10
LB	UHB MB/HB 2.4GHZ	5GHZ R1	UHB/N79 UWB CH9	L5 GNSS

LAT ANTENNAS

ANT1	ANT3	ANT5	ANT7	ANT9
LMB MB/HB STEWIE TX	LB MB/HB 2.4GHZ	5GHZ	UHB/N79	UHB/N79

CLASS DEFINITIONS			COMMA SEPARATED WITH WILDCARD SUPPORT: NET NAMES EX: DDR*	CLEAR ORIGINAL
CLASS NAME	CONST SET	CONSTRAINT SET	DP NAMES EX: DP:DP_AA*,DP_BB* (LINE STARTS WITH FLAG DP:)	Y/N
S_50_TRX_WIDE	S	A_DIELECTRIC_4XV_50_THIN_SE	50_TRX_ANT9*,50_TRX_HB_PAD_CPL_ANT9,50_TRX_UHB_HB_TO_ANT9	N

CLASS DEFINITIONS			COMMA SEPARATED WITH WILDCARD SUPPORT: NET NAMES EX: DDR*	CLEAR ORIGINAL
CLASS NAME	CONST SET	CONSTRAINT SET	DP NAMES EX: DP:DP_AA*,DP_BB* (LINE STARTS WITH FLAG DP:)	Y/N
P_50_TRX_WIDE	P	A_50_WIDE_SE	50_TRX_ANT9*,50_TRX_HB_PAD_CPL_ANT9,50-TRX_UHB_HB_TO_ANT9	N

CONFIDENTIAL AND PROPRIETARY APPLE SYSTEM DESIGN. FOR REFERENCE ONLY - NOT A CHANGE REQUEST

PAGE TITLE: LOWER ANTENNA FEEDS_ANT9 (41)

Apple Inc.

DRAWING NUMBER: 051-12836 SIZE: D

REVISION: 4.0.0

BRANCH: proto-2

PAGE: 41 OF 49

SHEET: 78 OF 100

NOTICE OF PROPRIETARY PROPERTY:
THE INFORMATION CONTAINED HEREIN IS THE PROPRIETARY PROPERTY OF APPLE INC.
THE POSESSOR AGREES TO THE FOLLOWING:
I TO MAINTAIN THIS DOCUMENT IN CONFIDENCE
II NOT TO REPRODUCE OR COPY IT
III NOT TO REVEAL OR PUBLISH IT IN WHOLE OR PART
IV ALL RIGHTS RESERVED

UPPER ANTENNA FEEDS

UAT ANTENNAS

ANT2	ANT4	ANT6	ANT8	ANT10
LB	UHB MB/HB 2.4GHZ	5GHZ R1	UHB/N79 UWB CH9	L5 GNSS

LAT ANTENNAS

ANT1	ANT3	ANT5	ANT7	ANT9
LMB MB/HB STEWIE TX	LB MB/HB 2.4GHZ	5GHZ	UHB/N79	UHB/N79

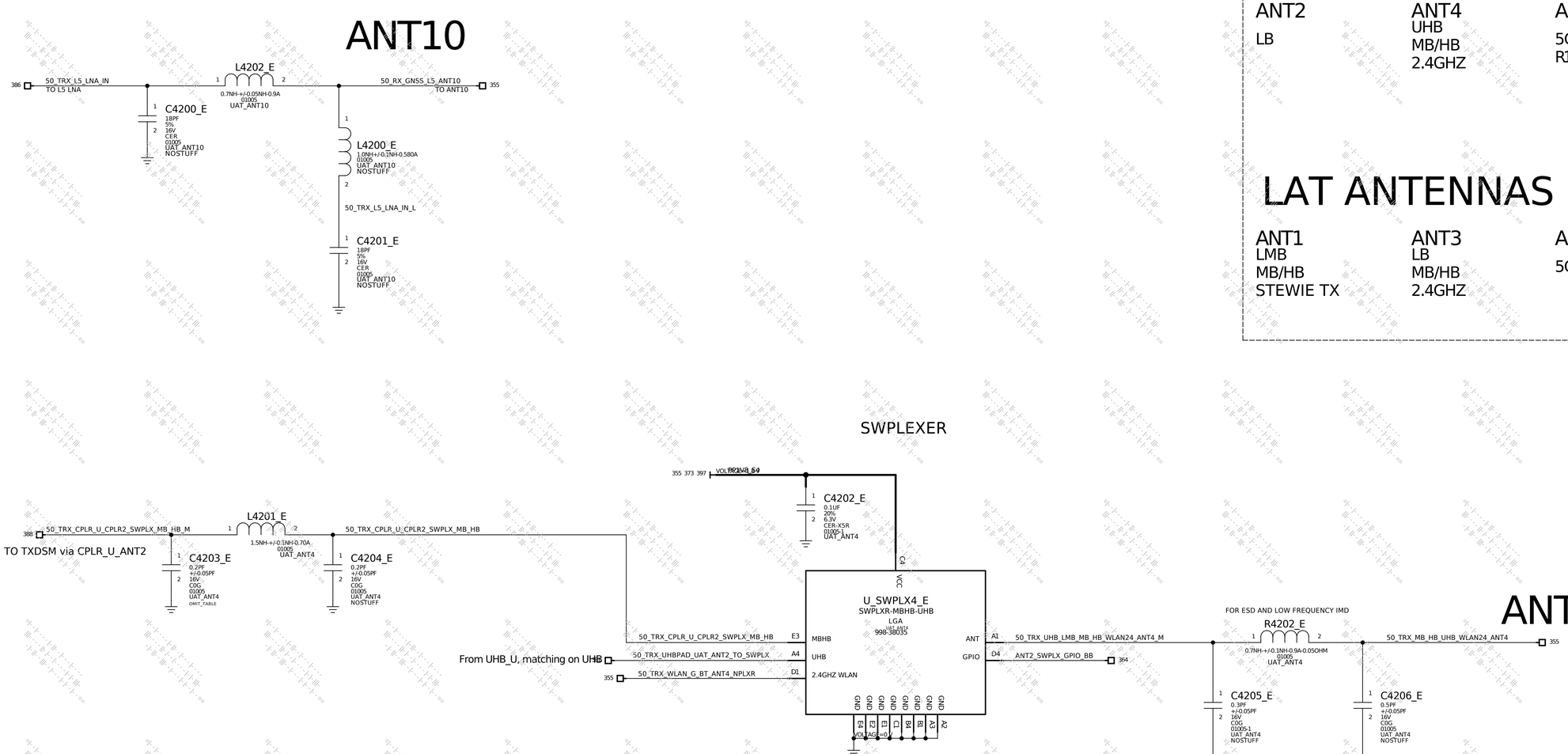

CLASS DEFINITIONS			COMMA SEPARATED WITH WILDCARD SUPPORT: NET NAMES EX: DDR*	CLEAR OVERRIDE
CLASS NAME	----	CONSTRAINT SET	DP NAMES EX: DP:DP_AA*,DP_BB* (LINE STARTS WITH FLAG DP:)	Y/N
S_50_TRX_WIDE	S	A_DIELECTRIC_4XV_50_THIN_SE	50_TRX_ANT4*,50_TRX_WLAN_G_BT_2E_TERM2	N
S_50_TRX_WIDE	S	A_DIELECTRIC_4XV_50_THIN_SE	50_TRX_WLAN_G_BT_ANT4_NPLXR_M	N

CLASS DEFINITIONS			COMMA SEPARATED WITH WILDCARD SUPPORT: NET NAMES EX: DDR*	CLEAR OVERRIDE
CLASS NAME	----	CONSTRAINT SET	DP NAMES EX: DP:DP_AA*,DP_BB* (LINE STARTS WITH FLAG DP:)	Y/N
P_50_TRX_WIDE	P	A_50_WIDE_SE	50_TRX_ANT4*,50_TRX_WLAN_G_BT_2E_TERM2	N
P_50_TRX_WIDE	P	A_50_WIDE_SE	50_TRX_WLAN_G_BT_ANT4_NPLXR_M	N

CONFIDENTIAL AND PROPRIETARY APPLE SYSTEM DESIGN. FOR REFERENCE ONLY - NOT A CHANGE REQUEST

PAGE TITLE
UPPER ANTENNA FEEDS_ANT2_4_10R (42)

Apple Inc.

DRAWING NUMBER 051-12836
SIZE D
REVISION 4.0.0
BRANCH proto-2
PAGE 42 OF 49
SHEET 79 OF 100

NOTICE OF PROPRIETARY PROPERTY:
THE INFORMATION CONTAINED HEREIN IS THE PROPRIETARY PROPERTY OF APPLE INC.
THE POSESSOR AGREES TO THE FOLLOWING:
I TO MAINTAIN THIS DOCUMENT IN CONFIDENCE
II NOT TO REPRODUCE OR COPY IT
III NOT TO REVEAL OR PUBLISH IT IN WHOLE OR PART
IV ALL RIGHTS RESERVED

BLANK (RESERVED)

CONFIDENTIAL AND PROPRIETARY APPLE SYSTEM DESIGN. FOR REFERENCE ONLY - NOT A CHANGE REQUEST

PAGE TITLE	BLANK (43)
	Apple Inc.
DRAWING NUMBER	051-12836
SIZE	D
REVISION	4.0.0
BRANCH	proto-2
PAGE	43 OF 49
SHEET	80 OF 100

NOTICE OF PROPRIETARY PROPERTY:
THE INFORMATION CONTAINED HEREIN IS THE PROPRIETARY PROPERTY OF APPLE INC.
THE POSESSOR AGREES TO THE FOLLOWING:
I TO MAINTAIN THIS DOCUMENT IN CONFIDENCE
II NOT TO REPRODUCE OR COPY IT
III NOT TO REVEAL OR PUBLISH IT IN WHOLE OR PART
IV ALL RIGHTS RESERVED

ANTENNA SYSTEM UAT

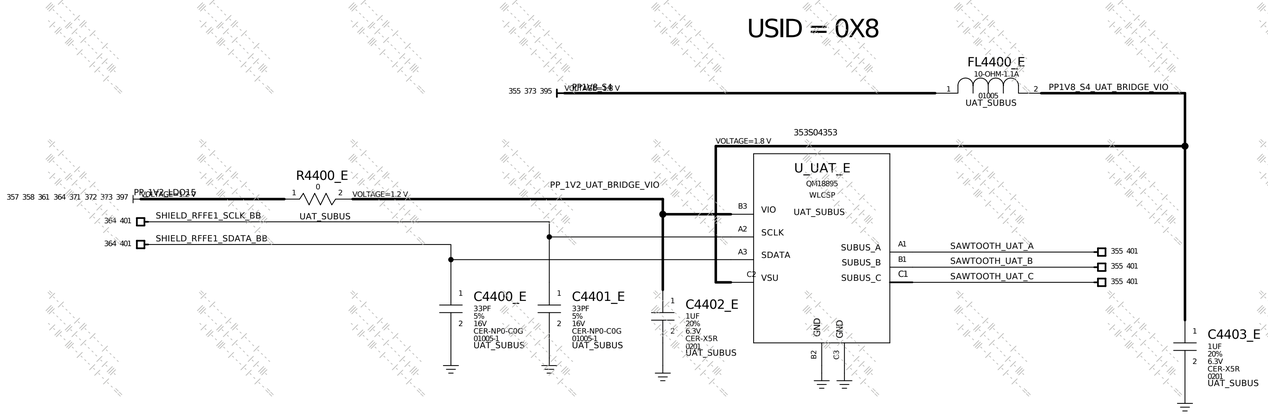

ANTENNA SYSTEM LAT

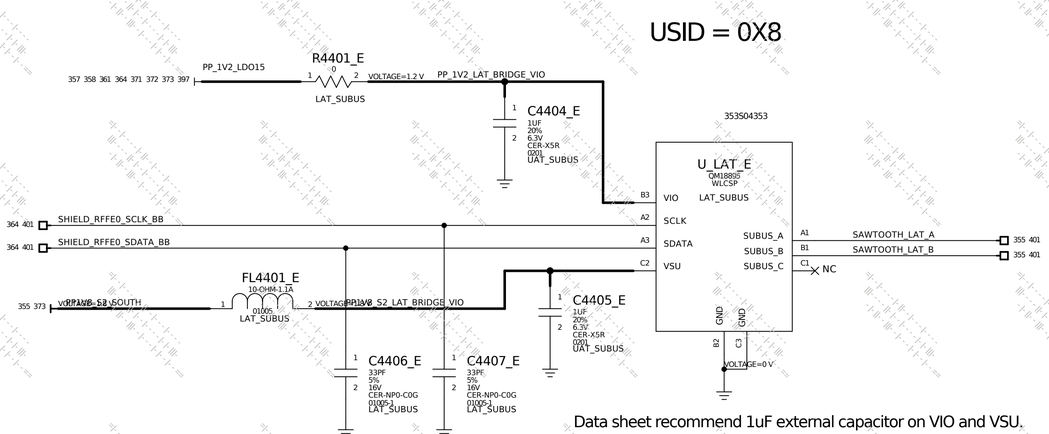

Data sheet recommend 1uF external capacitor on VIO and VSU.

PAGE TITLE	LAT UAT ST BRIDGES (44)
Apple Inc.	DRAWING NUMBER 051-12836 SIZE D
	REVISION 4.0.0
	BRANCH proto-2
	PAGE 44 OF 49
	SHEET 81 OF 100

NOTICE OF PROPRIETARY PROPERTY:
THE INFORMATION CONTAINED HEREIN IS THE PROPRIETARY PROPERTY OF APPLE INC.
THE POSESSOR AGREES TO THE FOLLOWING:
I TO MAINTAIN THIS DOCUMENT IN CONFIDENCE
II NOT TO REPRODUCE OR COPY IT
III NOT TO REVEAL OR PUBLISH IT IN WHOLE OR PART
IV ALL RIGHTS RESERVED

CONFIDENTIAL AND PROPRIETARY APPLE SYSTEM DESIGN. FOR REFERENCE ONLY - NOT A CHANGE REQUEST

BLANK (RESERVED)

CONFIDENTIAL AND PROPRIETARY APPLE SYSTEM DESIGN. FOR REFERENCE ONLY - NOT A CHANGE REQUEST

PAGE TITLE	BLANK (45)
	Apple Inc.
DRAWING NUMBER	051-12836
SIZE	D
REVISION	4.0.0
BRANCH	proto-2
PAGE	45 OF 49
SHEET	82 OF 100

NOTICE OF PROPRIETARY PROPERTY:

THE INFORMATION CONTAINED HEREIN IS THE PROPRIETARY PROPERTY OF APPLE INC.
THE POSESSOR AGREES TO THE FOLLOWING:
I TO MAINTAIN THIS DOCUMENT IN CONFIDENCE
II NOT TO REPRODUCE OR COPY IT
III NOT TO REVEAL OR PUBLISH IT IN WHOLE OR PART
IV ALL RIGHTS RESERVED

MMW B2B: IF & POWER

B2B CONNECTOR

PLUG: 516S01360 <---- On Flex
RCPT: 516S01359 <---- On MLB

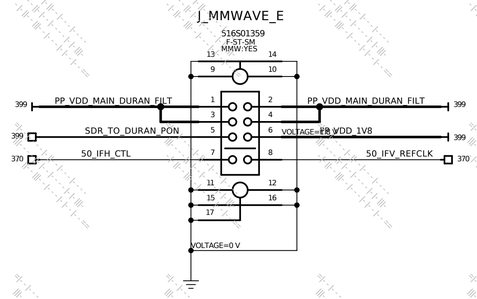

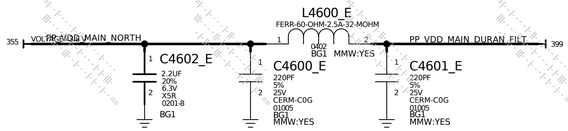

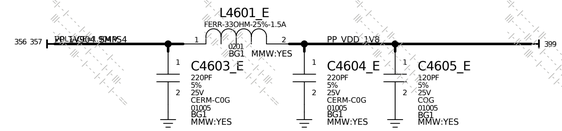

CONFIDENTIAL AND PROPRIETARY APPLE SYSTEM DESIGN. FOR REFERENCE ONLY - NOT A CHANGE REQUEST

PAGE TITLE: MMW B2B: IF & POWER (46)

Apple Inc.

DRAWING NUMBER: 051-12836
SIZE: D
REVISION: 4.0.0
BRANCH: proto-2
PAGE: 46 OF 49
SHEET: 83 OF 100

NOTICE OF PROPRIETARY PROPERTY:
THE INFORMATION CONTAINED HEREIN IS THE PROPRIETARY PROPERTY OF APPLE INC.
THE POSESSOR AGREES TO THE FOLLOWING:
I TO MAINTAIN THIS DOCUMENT IN CONFIDENCE
II NOT TO REPRODUCE OR COPY IT
III NOT TO REVEAL OR PUBLISH IT IN WHOLE OR PART
IV ALL RIGHTS RESERVED

CONFIDENTIAL AND PROPRIETARY APPLE SYSTEM DESIGN. FOR REFERENCE ONLY - NOT A CHANGE REQUEST

BLANK

PAGE TITLE
BLANK (47)

Apple Inc.

DRAWING NUMBER 051-12836
SIZE D
REVISION 4.0.0
BRANCH proto-2
PAGE 47 OF 49
SHEET 84 OF 100

NOTICE OF PROPRIETARY PROPERTY:
THE INFORMATION CONTAINED HEREIN IS THE PROPRIETARY PROPERTY OF APPLE INC.
THE POSESSOR AGREES TO THE FOLLOWING:
I TO MAINTAIN THIS DOCUMENT IN CONFIDENCE
II NOT TO REPRODUCE OR COPY IT
III NOT TO REVEAL OR PUBLISH IT IN WHOLE OR PART
IV ALL RIGHTS RESERVED

DBG & BB PROBE POINTS

CONFIDENTIAL AND PROPRIETARY APPLE SYSTEM DESIGN. FOR REFERENCE ONLY - NOT A CHANGE REQUEST

DEBUG CONNECTOR

J_BBDBG_E
BM29P-12DP/2-0.35V(51)
M-ST-SM

VOLTAGE=0 V — 14, 13
VOLTAGE=3.0 V — 9
NOSTUFF 516000753

Pin	Net	Page
1	GPIO_SEQ_PMU_TO_BBPMU_RESET_L_S2	355 359
2	NC	
3	UART_BB_FROM_DEBUG	364
4	NC	
5	UART_BB_TO_DEBUG	364
6	SWD_NUB_TO_BB_SWCLK	355 363
7	SWD_NUB_BI_BB_SWDIO	355 363
8		
9	PP3V0_ALS_RADIO_S2	355 370
10	85_EUSB_BB_DBG_P	363
11	GPIO_PMU_TO_BB_DEBUG_EN_1VX_S2	355 358
12	85_EUSB_BB_DBG_N	363
15		
16		

SPMI

Test point	Net	Page
PP4814_E	BB_BBPMU_SPMI_DATA	358 359 363
PP4816_E	BB_BBPMU_SPMI_CLK	358 359 363
PP4818_E	SPMI0_HEB_AOP_TO_BB_WLAN_NFC_UWB_CLK	355 364
PP4824_E	SPMI1_COEX_AOP_TO_BB_WLAN_UWB_CLK	355 364

POWER

Test point	Net	Page
PP4830_E	BBPMU_FAULT	358 359

GNSS

Test point	Net	Page
PP4879_E	GNSS_L5_ELNA_EN	384 386
PP4880_E	GPIO_AOP_TO_GNSS_ENABLE	355 384
PP4881_E	GPIO_AOP_TO_GNSS_CS_L	355 384
PP4883_E	SPI1_AOP_TO_GNSS_UWB_PICO	355 384
PP4884_E	SPI1_AOP_FROM_GNSS_UWB_POCI	355 384
PP4886_E	CLK_GPIO_PMU_TO_WLAN_UWB_GNSS_32K_S4	355 384
PP4889_E	GNSS_TCXO_PWREN	384

SIM

Test point	Net	Page
PP4847_E	BB_SIM1_PSIM_RESET_L	358 364
PP4848_E	BB_SIM1_PSIM_CLK	358 364
PP4850_E	BB_SIM1_PSIM_DATA	358 364
PP4852_E	IO_BB_TO_SIM0_RESET_L	355 358
PP4854_E	IO_BB_TO_SIM0_CLK	355 358
PP4856_E	IO_BB_BI_SIM0_DATA	355 358
PP4844_E	BB_SIM2_CLK_ESIM_1V8	364 366
PP4845_E	BB_SIM2_DATA_ESIM_1V8	364 366
PP4846_E	BB_SIM2_RESET_ESIM_1V8_L	364 366

AP POWER

PCIE

Test point	Net	Page
PP4823_E	85_PCIE_GP1_AP_TO_BB_REFCLK_P	355 363
PP4826_E	85_PCIE_GP1_AP_TO_BB_REFCLK_N	355 363
PP4864_E	GPIO_PMU_FROM_BB_PCIE_HOST_WAKE_L_S2	355 364
PP4866_E	PCIE_GP1_AP_TO_BB_PERST_L	355 364

BASEBAND

Test point	Net	Page
PP4832_E	BB_RESOUT_L	363
PP4862_E	PS_HOLD_R	363
PP4861_E	PMK_RESOUT_L	359 363
PP4876_E	PMX75_RB	358 359
PP4801_E	GPIO_AP_TO_BB_COREDUMP	355 364
PP4822_E	GPIO_AOP_TO_BBPMU_COEX	355 358
PP4825_E	GPIO_NFC_F_TO_BBPMU_CLK_EN	355 358
PP4810_E	GPIO_AOP_TO_GNSS_TIME_MARK	355 384
PP4835_E	SDR_SP3T_GRFC_V1	369 370
PP4837_E	SDR_SP3T_GRFC_V2	369 370
PP4827_E	GPIO_NFC_P_TO_BBPMU_CLK_EN	355 358

BB RFFE

Test point	Net	Page
PP4857_E	SHIELD_RFFE0_SCLK_BB	364 397
PP4858_E	SHIELD_RFFE0_SDATA_BB	364 397
PP4859_E	SHIELD_RFFE1_SCLK_BB	364 397
PP4860_E	SHIELD_RFFE1_SDATA_BB	364 397
PP4853_E	SHIELD_RFFE2_SCLK_BB_TO_SDR	364 369
PP4855_E	SHIELD_RFFE2_SDATA_BB_TO_SDR	364 369

SAWTOOTH

Test point	Net	Page
PP4865_E	SAWTOOTH_UAT_A	355 397
PP4867_E	SAWTOOTH_UAT_B	355 397
PP4868_E	SAWTOOTH_UAT_C	355 397
PP4869_E	SAWTOOTH_LAT_A	355 397
PP4870_E	SAWTOOTH_LAT_B	355 397

SDR RFFE

Test point	Net	Page
PP4890_E	SHIELD_RFFE1_SCLK_SDR	369
PP4898_E	SHIELD_RFFE5_SCLK_SDR	369 374 375 377 382
PP4891_E	SHIELD_RFFE1_SDATA_SDR	369
PP4899_E	SHIELD_RFFE5_SDATA_SDR	369 374 375 377 382
PP4892_E	SHIELD_RFFE2_SCLK_SDR	369
PP4838_E	SHIELD_RFFE6_SCLK_SDR	369 378 379 381 383
PP4893_E	SHIELD_RFFE2_SDATA_SDR	369
PP4839_E	SHIELD_RFFE6_SDATA_SDR	369 378 379 381 383
PP4894_E	SHIELD_RFFE3_SCLK_SDR	369 372 374
PP4895_E	SHIELD_RFFE3_SDATA_SDR	369 372 374
PP4896_E	SHIELD_RFFE4_SCLK_SDR	369 381 388
PP4897_E	SHIELD_RFFE4_SDATA_SDR	369 381 388

DOTARA

Test point	Net	Page
PP4828_E	GPIO_WLCHGR_TO_BBPMU_CLK_EN	355 358

CLOCKS

Test point	Net	Page
PP4800_E	SHIELD_MDM_19P2M_CLK	359 363
PP4803_E	SHIELD_SLEEP_CLK_32K	359 363
PP4806_E	CLK_WLCHGR_FROM_BBPMU_38M4	355 359
PP4841_E	SHIELD_SDR_76P8M_CLK	359 369 401
PP4842_E	SHIELD_SDR_76P8M_CLK	359 369 401

Add additional PP for SHIELD_SDR_76P8M_CLK for validation purpose. Please put PP4842_E on bg_top and close to SDR pin, so that we can have more accurate phase noise mearsurement. The other PP can be used for functional test without the need of debounding boards. Still better to put it close to SDR pin.

QLINK

PP4872-PP4875 QLINK DL0s are nice to have. Can be removed if we need room.

SMPS PPs are nice to have. Can be removed if we need room.

PAGE TITLE	DBG & PPs (48)
Apple Inc.	
DRAWING NUMBER	051-12836
SIZE	D
REVISION	4.0.0
BRANCH	proto-2
PAGE	48 OF 49
SHEET	85 OF 100

NOTICE OF PROPRIETARY PROPERTY:
THE INFORMATION CONTAINED HEREIN IS THE PROPRIETARY PROPERTY OF APPLE INC.
THE POSESSOR AGREES TO THE FOLLOWING:
I TO MAINTAIN THIS DOCUMENT IN CONFIDENCE
II NOT TO REPRODUCE OR COPY IT
III NOT TO REVEAL OR PUBLISH IT IN WHOLE OR PART
IV ALL RIGHTS RESERVED

BOM TABLES

CAP ALT TABLES

01005 0.1UF

ALTERNATE PART NO.	PRIMARY PART NO.	REFERENCE DESIGNATORS	COMMENT
132S00260	132S00371	C1809_E,C1909_E	CAP,CER,X5R,0.1UF,10%,10V,01005

ALTERNATE PART NO.	PRIMARY PART NO.	REFERENCE DESIGNATORS	COMMENT
132S0683	132S00154	ALL	CAP,CER,X5R,0.1UF,10%,6.3V,01005

ALTERNATE PART NO.	PRIMARY PART NO.	REFERENCE DESIGNATORS	COMMENT
132S00499	132S00498	ALL	TAIYO,CAP,CER,X5R,0.1UF,20%,6.3V,T,01005
132S00253	132S00498	ALL	MUR,CAP,CER,X5R,0.1UF,20%,6.3V,01005

01005 0.22UF (NON-SDR)

ALTERNATE PART NO.	PRIMARY PART NO.	REFERENCE DESIGNATORS	COMMENT
132S00380	132S00014	C0705_E,C0706_E,C0718_E-C0720_E,C0724_E-C0726_E,C0811_E-C0813_E,C0815_E,C0816_E,C0822_E,C0826_E-C0829_E,C0832_E,C0834_E,C0836_E,C0838_E,C0839_E,C0842_E-C0849_E,C0851_E,C1002_E-C1005_E,C1503_E-C1507_E,C1516_E-C1520_E,C1522_E-C1523_E,C1531_E-C1535_E,C1537_E,C1540_E-C1552_E,C1561_E-C1567_E,C3106_E	01005,0.22UF,6.3V,TAIYO

0201 2.2UF

ALTERNATE PART NO.	PRIMARY PART NO.	REFERENCE DESIGNATORS	COMMENT
138S00516	138S00646	ALL	SEMCO,CAP,CER,X5R,2.2UF:20%,6.3V,0201

0201 4UF

ALTERNATE PART NO.	PRIMARY PART NO.	REFERENCE DESIGNATORS	COMMENT
138S00116	138S00071	ALL	CAP,X5R,4UF,0201,0.55MM,TAIYO

0402 15UF

ALTERNATE PART NO.	PRIMARY PART NO.	REFERENCE DESIGNATORS	COMMENT
138S00048	138S00003	ALL	0402,15UF,6.3V,KYOCERA
138S00405	138S00406	ALL	KYO, CAP,X5R,13UF,20%,6.3V,0402

0402 16UF/18UF

ALTERNATE PART NO.	PRIMARY PART NO.	REFERENCE DESIGNATORS	COMMENT
138S00315	138S00313	ALL	0402,18UF,4V,SEMCO

0201 1UF

ALTERNATE PART NO.	PRIMARY PART NO.	REFERENCE DESIGNATORS	COMMENT
138S0736	138S00156	ALL	Semco, CAP,CER,1UF,6.3V,X5R ,20%,0201
138S0685	138S00156	ALL	MUR, CAP,CER,1UF,6.3V,X5R ,20%,0201

0201 1UF 16V

ALTERNATE PART NO.	PRIMARY PART NO.	REFERENCE DESIGNATORS	COMMENT
138S0814	138S00527	ALL	SEMCO,CAP,X5R,1UF,20%,16V,0201,H0.39

01005 220PF

ALTERNATE PART NO.	PRIMARY PART NO.	REFERENCE DESIGNATORS	COMMENT
131S00692	131S00551	ALL	Taiyo,CAP,CER,C0G,220PF,5%,25V,01005
131S00653	131S00551	ALL	MUR,CAP,CER,C0G,220PF,5%,25V,01005

01005 0.01UF

ALTERNATE PART NO.	PRIMARY PART NO.	REFERENCE DESIGNATORS	COMMENT
132S00225	132S00224	ALL	Semco,CAP,CER,X5R,0.01UF,10%,6.3V,S,01005
132S00226	132S00224	ALL	Taiyo,CAP,CER,X5R,0.01UF,10%,6.3V,S,01005

01005 12PF

ALTERNATE PART NO.	PRIMARY PART NO.	REFERENCE DESIGNATORS	COMMENT
131S00846	131S00923	C2200_E	CAP,CER,NP0/C0G,12PF,5%,16V,01005

IND ALT TABLE

0.33UH

ALTERNATE PART NO.	PRIMARY PART NO.	REFERENCE DESIGNATORS	COMMENT
152S02035	152S01973	ALL	TAIYO IND,PWR,0.33UH,20%,30MOHM,5.4A,1412
152S02034	152S01973	ALL	SAMSUNG IND,PWR,0.33UH,20%,30MOHM,5.4A,1412

0.47UH

ALTERNATE PART NO.	PRIMARY PART NO.	REFERENCE DESIGNATORS	COMMENT
152S02038	152S01974	ALL	TAIYO IND,MULT,0.47UH,20%,36MOHM,3.6A,1412
152S02037	152S01974	ALL	SAMSUNG IND,FILM,0.47UH,20%,35MOHM,3.6A,1412

MISC ALT TABLE

EEPROM

ALTERNATE PART NO.	PRIMARY PART NO.	REFERENCE DESIGNATORS	COMMENT
335S00657	335S0894	U_EEPROM_E	IC,EEPROM,8KBIT,SERIAL,I2C,RHM,WLCSP4
335S00013	335S0894	U_EEPROM_E	IC,EEPROM,8KBIT,SERIAL,I2C,WLCSP4

FB

ALTERNATE PART NO.	PRIMARY PART NO.	REFERENCE DESIGNATORS	COMMENT
155S01048	155S0876	ALL	FERR BD,10 OHM,50%,1.1A,0.05 DCR,01005

100kOhm 01005

ALTERNATE PART NO.	PRIMARY PART NO.	REFERENCE DESIGNATORS	COMMENT
118S00983	118S00982	ALL	RES,TK,100K OHM,1%,1/32W,YAGEO,01005

OMIT TABLES

SIM

PART NUMBER	BOMOPTION	REFERENCE DESIGNATORS	QTY	DESCRIPTION
118S00310	SIM:PSIM1+LOONIE	R0504_E	1	RES,TK,60.4K OHM,1%,1/32W,01005
118S00345	SIM:LOONIE_ONLY	R0504_E	1	RES,TK,75K OHM,1%,1/32W,01005

PLATFORM

PART NUMBER	BOMOPTION	REFERENCE DESIGNATORS	QTY	DESCRIPTION
118S00317	PLATFORM:MAV25.1	R0503_E	1	RES,TK,36.5K OHM,1%,1/32W,01005
118S00290	PLATFORM:MAV25.0	R0503_E	1	RES,TK,27K OHM,1%,1/32W,01005
118S00271	PLATFORM:MAV25.2	R0503_E	1	RES,TK,47.5K OHM,1%,1/32W,01005
118S00289	PLATFORM:RADIO_DEV	R0503_E	1	RES,TK,5.6K OHM,1%,1/32W,01005
118S00310	PLATFORM:MAV25.3	R0503_E	1	RES,TK,60.4K OHM,1%,1/32W,01005

BOARD_REV

PART NUMBER	BOMOPTION	REFERENCE DESIGNATORS	QTY	DESCRIPTION
118S00248	BOARD_REV:PROTO1.5	R0502_E	1	RES,TK,19.1K OHM,1%,1/32W,01005
118S00310	BOARD_REV:DVT	R0502_E	1	RES,TK,60.4K OHM,1%,1/32W,01005
118S00271	BOARD_REV:CARRIER	R0502_E	1	RES,TK,47.5K OHM,1%,1/32W,01005
118S00289	BOARD_REV:PROTO0	R0502_E	1	RES,TK,5.6K OHM,1%,1/32W,01005
118S00317	BOARD_REV:EVT	R0502_E	1	RES,TK,36.5K OHM,1%,1/32W,01005
118S00290	BOARD_REV:PROTO2	R0502_E	1	RES,TK,27K OHM,1%,1/32W,01005
118S00268	BOARD_REV:PROTO1	R0502_E	1	RES,TK,12K OHM,1%,1/32W,01005
118S00345	BOARD_REV:PVT	R0502_E	1	RES,TK,75K OHM,1%,1/32W,01005
118S00432	BOARD_REV:EVT_3V	R0502_E	1	RES,TK,115K OHM,1%,1/32W,01005

RF_SKU

PART NUMBER	BOMOPTION	REFERENCE DESIGNATORS	QTY	DESCRIPTION	
118S00289	RF_SKU:WW+G+MMW	R0501_E	1	RES,TK,5.6K OHM,1%,1/32W,01005	SKU 1
118S00268	RF_SKU:WW+G	R0501_E	1	RES,TK,12K OHM,1%,1/32W,01005	SKU 2
118S00248	RF_SKU:RS+G	R0501_E	1	RES,TK,19.1K OHM,1%,1/32W,01005	SKU 3
118S00317	RF_SKU:RS-CHN	R0501_E	1	RES,TK,36.5K OHM,1%,1/32W,01005	SKU 5
118S00290	RF_SKU:RS	R0501_E	1	RES,TK,27K OHM,1%,1/32W,01005	SKU 4

1.6GHz Disable

PART NUMBER	BOMOPTION	REFERENCE DESIGNATORS	CRITICAL	QTY	DESCRIPTION
117S00067	RF_SKU:RS-CHN||RF_SKU:RS	R2603_E	CRITICAL	1	RES,TK,0 OHM,1/32W,01005

LBPAD

PART NUMBER	BOMOPTION	REFERENCE DESIGNATORS	CRITICAL	QTY	DESCRIPTION
353S03933	RF_SKU:WW+G+MMW||RF_SKU:WW+G	U_PA_LB_E	CRITICAL	1	IC,PAD,LB,SKY58480,DSMBGA109
353S04122	RF_SKU:RS+G||RF_SKU:RS||RF_SKU:RS-CHN	U_PA_LB_E	CRITICAL	1	IC,PAD,LB,SKY58486,DP,DSMBGA109

TxDSM

PART NUMBER	BOMOPTION	REFERENCE DESIGNATORS	QTY	DESCRIPTION
353S03855	RF_SKU:WW+G	U_DSM_HB_E	1	IC,DSM,HB TX,AFEM-8266,DSMLGA106
353S04089	RF_SKU:RS+G||RF_SKU:RS||RF_SKU:RS-CHN||RF_SKU:WW+G+MMW	U_DSM_HB_E	1	IC,DSM,HB TX,DP,AFEM-8267,DSMLGA106

HBPAD

PART NUMBER	BOMOPTION	REFERENCE DESIGNATORS	CRITICAL	QTY	DESCRIPTION
353S03813	RF_SKU:WW+G	U_PA_HB_E	CRITICAL	1	IC,PAD,HB,WW,AFEM-8256,DSMLGA146
353S03845	RF_SKU:RS+G|| RF_SKU:RS|| RF_SKU:RS-CHN|| RF_SKU:WW+G +MMW	U_PA_HB_E	CRITICAL	1	IC,PAD,HB,ET&APT,DP,AFEM-8257,DSMLGA145

CELLULAR MATCHING

PART NUMBER	BOMOPTION	REFERENCE DESIGNATORS	QTY	DESCRIPTION	
131S00841	RF_SKU:RS-CHN	C4203_E	1	CAP,C0G,0.4PF,+/-0.05PF,16V,HQ,01005	
131S00840	RF_SKU:RS-CHN	C2811_E	1	CAP,C0G,0.3PF,+/-0.05PF,16V,HQ,01005	
131S00839	RF_SKU:RS-CHN	C2812_E	1	CAP,C0G,0.2PF,+/-0.05PF,16V,HQ,01005	C2812_E = NoStuff for SKU1-4
131S00840	RF_SKU:RS-CHN	C2610_E	1	CAP,C0G,0.3PF,+/-0.05PF,16V,HQ,01005	

CONFIDENTIAL AND PROPRIETARY APPLE SYSTEM DESIGN. FOR REFERENCE ONLY - NOT A CHANGE REQUEST

PAGE TITLE: BOM TABLES (49)

Apple Inc.

DRAWING NUMBER: 051-12836 SIZE: D

REVISION: 4.0.0

BRANCH: proto-2

PAGE: 49 OF 49

SHEET: 86 OF 100

NOTICE OF PROPRIETARY PROPERTY:
THE INFORMATION CONTAINED HEREIN IS THE PROPRIETARY PROPERTY OF APPLE INC.
THE POSESSOR AGREES TO THE FOLLOWING:
I TO MAINTAIN THIS DOCUMENT IN CONFIDENCE
II NOT TO REPRODUCE OR COPY IT
III NOT TO REVEAL OR PUBLISH IT IN WHOLE OR PART
IV ALL RIGHTS RESERVED

REV	ECN	DESCRIPTION OF REVISION	CK APPD / DATE
4	0073816450	ENGINEERING RELEASED	2025-11-19

SHEET	PAGE/CSA	CONTENTS	SYNC LABEL	SYNC DATE
1	1	Table of Contents		
2	2	Hierarchy IOs		
3	3	Tencha		
4	4	Tencha_Power		
5	5	2G4 rFEM (LAT)		
6	6	2G4 rFEM (UAT)		

DRAWING TITLE
SCH,MLB,BG,V64

Apple Inc.

DRAWING NUMBER 051-12836
SIZE D
REVISION 4.0.0
BRANCH proto-2
PAGE 1 OF 8
SHEET 87 OF 100

NOTICE OF PROPRIETARY PROPERTY:

THE INFORMATION CONTAINED HEREIN IS THE PROPRIETARY PROPERTY OF APPLE INC.
THE POSESSOR AGREES TO THE FOLLOWING:
I TO MAINTAIN THIS DOCUMENT IN CONFIDENCE
II NOT TO REPRODUCE OR COPY IT
III NOT TO REVEAL OR PUBLISH IT IN WHOLE OR PART
IV ALL RIGHTS RESERVED

REV	ECN	DESCRIPTION OF REVISION	CK APPD / DATE
4	0073816450	ENGINEERING RELEASED	2025-11-19

ALTERNATE PART NO.	PRIMARY PART NO.	REFERENCE DESIGNATORS	COMMENT
339M00479	339M00482	U_WLAN_W	USI and AMKOR 50% EACH

ALTERNATE PART NO.	PRIMARY PART NO.	REFERENCE DESIGNATORS	COMMENT
138S0831	138S00516	C0404_W-C0406_W,C0408_W,C0409_W,C0414_W,C0415_W,C0505_W,C0607_W,C0809_W	CAP,X5R,2.2UF,20%,6.3V,S,HZ0201
138S00646	138S00516	C6100,C6110,C7302,C9107,C9200,C9307,C9343	CAP,X5R,2.2UF,20%,6.3V,S,HZ0201
138S00646	138S00516	C0404_W-C0406_W,C0408_W,C0409_W,C0414_W,C0415_W,C0505_W,C0607_W,C0809_W	CAP,X5R,2.2UF,20%,6.3V,S,HZ0201

ALTERNATE PART NO.	PRIMARY PART NO.	REFERENCE DESIGNATORS	COMMENT
132S00200	132S00199	C0407_W	CAP,CER,X5R,0.1UF,20%,10V,01005

ALTERNATE PART NO.	PRIMARY PART NO.	REFERENCE DESIGNATORS	COMMENT
138S0831	138S00516	C0708_W	CAP,X5R,2.2UF,20%,6.3V,S,HZ0201
138S00646	138S00516	C0708_W	CAP,X5R,2.2UF,20%,6.3V,S,HZ0201

SYMBOL IO PORTS

POWER

404 406	PP_VDD_MAIN_EAST	4.9V	404 406
404 408	PP_VDD_MAIN_EAST	4.9V	404 408
404 406	PP1V8_S4	1.8 V	404 406
404 405 406	PP1V24_S4	1.24 V	404 405 406
404 408	PP1V8_S4	1.8 V	404 408
404 407	PP_VDD_MAIN_SOUTH	3.8V	404 407
404 407	PP1V8_S2_SOUTH	1.8 V	404 407
404 409	PP_VDD_MAIN_EAST	4.9V	404 409
404 409	PP1V8_S4	1.8 V	404 409
404 410	PP_VDD_MAIN_NORTH	3.8 V	404 410
404 410	PP1V8_S2_NORTH	1.8 V	404 410

7G UAT UWB RFEM CONNECTIONS

404 409	GPIO_UWB_TO_UAT_7GFEM_CTRL1_S4	404 409
404 409	GPIO_UWB_TO_UAT_7GFEM_CTRL2_S4	404 409
404 409	50_TRX_UWBCH5_NB_UAT_7GFEM_M	404 409
404 409	50_TRX_UWBCH9_TOF_DPLX	404 409

ANTENNA

404 407	50_TRX_WLAN_G_BT_ANT3_NPLXR	404 407
404 408	50_TRX_WLAN_G_BT_ANT4_NPLXR	404 408
404 409	50_TRX_WLAN7G_UWBCH5_NB_CH9_TOF_ANT6	404 409

UWB -> LAT 7 GHZ FEM

404 410	GPIO_UWB_TO_LAT_7GFEM_CTRL1	404 410
404 410	GPIO_UWB_TO_LAT_7GFEM_CTRL2	404 410
404 410	50_TRX_NB_LAT_7GFEM_M	404 410

ANT

404 410	50_TRX_WLAN7G_NB_ANT16	404 410

AP CONNECTIONS

404 405	GPIO_WLAN_TO_AP_TIME_SYNC	404 405
404 405	GPIO_AP_FROM_BT_AUDIO_SYNC	404 405

PCIE

404 405	PCIE_GP0_AP_TO_WLAN_PERST_L	404 405
404 405	PCIE_GP0_AP_BI_WLAN_CLKREQ_L	404 405
404 405	85_PCIE_GP0_AP_TO_WLAN_TX_P	404 405
404 405	85_PCIE_GP0_AP_TO_WLAN_TX_N	404 405
404 405	85_PCIE_GP0_AP_FROM_WLAN_RX_P	404 405
404 405	85_PCIE_GP0_AP_FROM_WLAN_RX_N	404 405
404 405	85_PCIE_GP0_AP_TO_WLAN_REFCLK_P	404 405
404 405	85_PCIE_GP0_AP_TO_WLAN_REFCLK_N	404 405

AOP CONNECTIONS

404 405	SPMI0_HEB_AOP_TO_BB_WLAN_NFC_UWB_CLK	404 405
404 405	SPMI0_HEB_AOP_BI_BB_WLAN_NFC_UWB_DATA_R2	404 405
	SPMI1_COEX_AOP_TO_BB_WLAN_UWB_CLK	404 405
	SPMI1_COEX_AOP_BI_BB_WLAN_UWB_DATA_R2	404 405
404 405 406	GPIO_SCM_NUB_FROM_WLAN_ERROR_DETECT	404 405
404 405	SWD_NUB_TO_MANY_SWCLK0_S2	404 405
404 405	SWD_NUB_BI_WLAN_PORTC_SWDIO_S2	404 405

PMU CONNECTIONS

404 405 406	GPIO_SEQ_PMU_TO_WLAN_REG_ON_S4	404 405 406
404 405	GPIO_PMU_FROM_WLAN_HOST_WAKE_S2	404 405
404 405	CLK_GPIO_PMU_TO_WLAN_UWB_GNSS_32K_S4	404 405
404 406	IO_PMU_TO_MANY_GLBL_MUTE_L_S4	404 406

SE CONNECTIONS

404 405	I2C_S4_BT_TO_SE_SCL	404 405
404 405	I2C_S4_BT_BI_SE_SDA	404 405
404 405	GPIO_SE_TO_BT_PKT_RDY_S4	404 405

UWB CONNECTIONS

404 405	IO_S4_BT_TO_UWB_TIME_SYNC	404 405
404 405	IO_S4_BT_TO_UWB_WAKE	404 405
404 405	COEX_UWB_GRANT_OR_DENY	404 405

SPKR CONNECTIONS

404 405	GPIO_S4_BT_TO_BOT_SPKR_TRIG	404 405

DRAWING TITLE	SCH,MLB,BG,V64
	Apple Inc.
DRAWING NUMBER	051-12836
SIZE	D
REVISION	4.0.0
BRANCH	proto-2
PAGE	2 OF 8
SHEET	88 OF 100

NOTICE OF PROPRIETARY PROPERTY:
THE INFORMATION CONTAINED HEREIN IS THE PROPRIETARY PROPERTY OF APPLE INC.
THE POSESSOR AGREES TO THE FOLLOWING:
I TO MAINTAIN THIS DOCUMENT IN CONFIDENCE
II NOT TO REPRODUCE OR COPY IT
III NOT TO REVEAL OR PUBLISH IT IN WHOLE OR PART
IV ALL RIGHTS RESERVED

WIFI-BT-THREAD
TENCHA

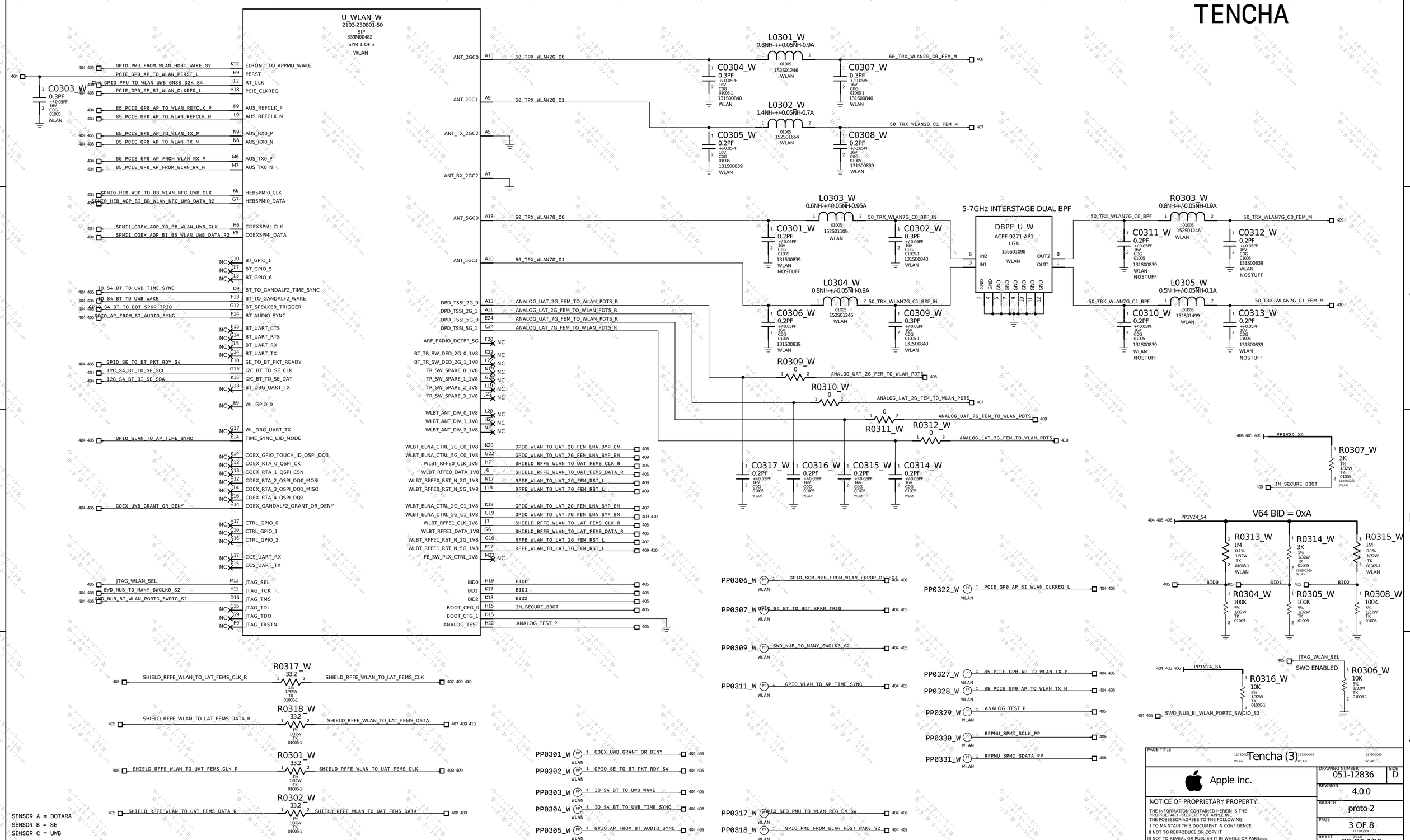

PAGE TITLE

Tencha (3)

Apple Inc.

DRAWING NUMBER 051-12836

SIZE D

REVISION 4.0.0

BRANCH proto-2

PAGE 3 OF 8

SHEET 89 OF 100

NOTICE OF PROPRIETARY PROPERTY:

THE INFORMATION CONTAINED HEREIN IS THE PROPRIETARY PROPERTY OF APPLE INC.
THE POSESSOR AGREES TO THE FOLLOWING:
I TO MAINTAIN THIS DOCUMENT IN CONFIDENCE
II NOT TO REPRODUCE OR COPY IT
III NOT TO REVEAL OR PUBLISH IT IN WHOLE OR PART
IV ALL RIGHTS RESERVED

WIFI-BT-THREAD
TENCHA

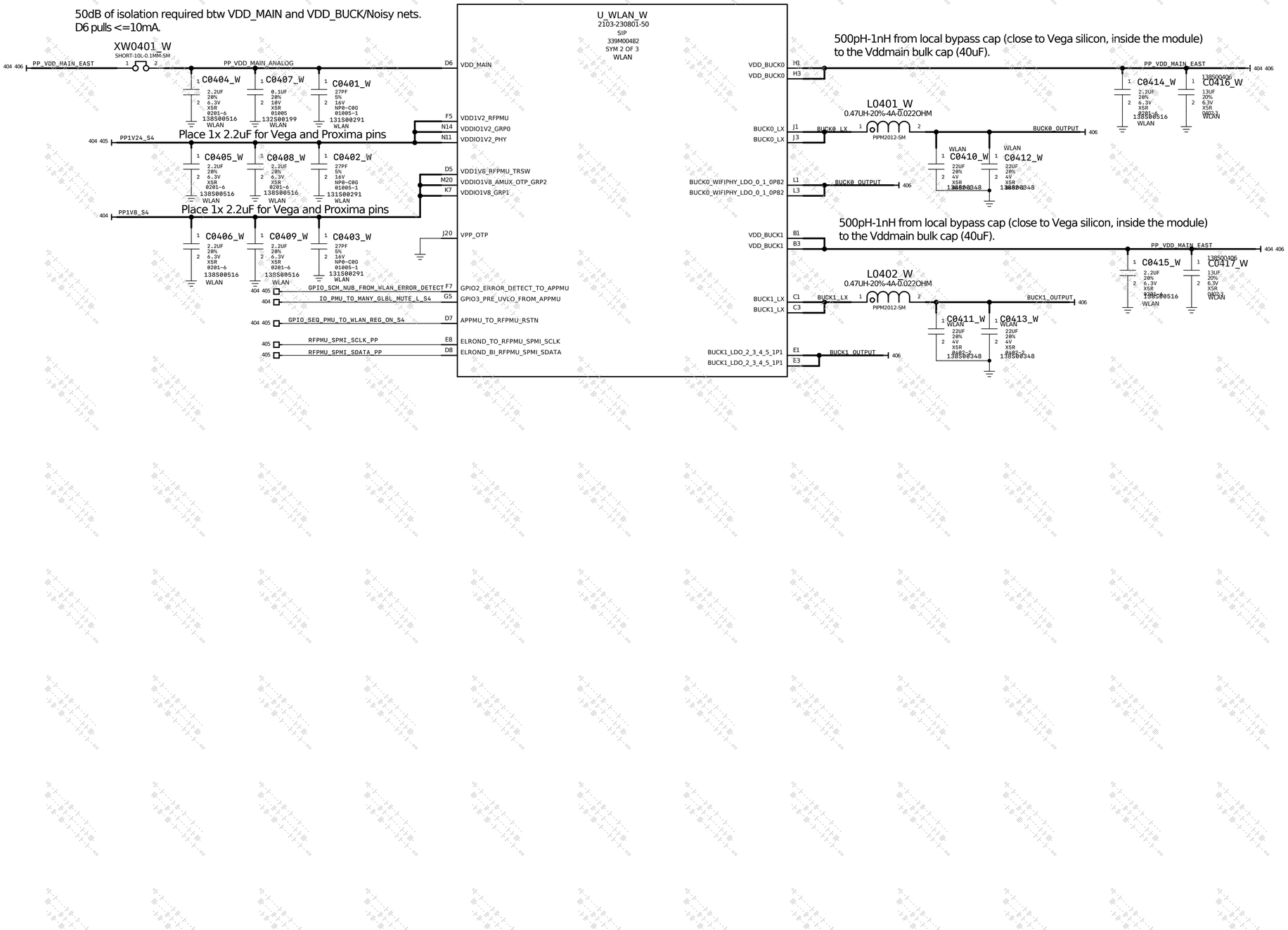

PAGE TITLE	Tencha_Power (4)
Apple Inc.	DRAWING NUMBER 051-12836 SIZE D
	REVISION 4.0.0
	BRANCH proto-2
	PAGE 4 OF 8
	SHEET 90 OF 100

NOTICE OF PROPRIETARY PROPERTY:
THE INFORMATION CONTAINED HEREIN IS THE PROPRIETARY PROPERTY OF APPLE INC.
THE POSESSOR AGREES TO THE FOLLOWING:
I TO MAINTAIN THIS DOCUMENT IN CONFIDENCE
II NOT TO REPRODUCE OR COPY IT
III NOT TO REVEAL OR PUBLISH IT IN WHOLE OR PART
IV ALL RIGHTS RESERVED

LAT 2.4 GHZ RFEM

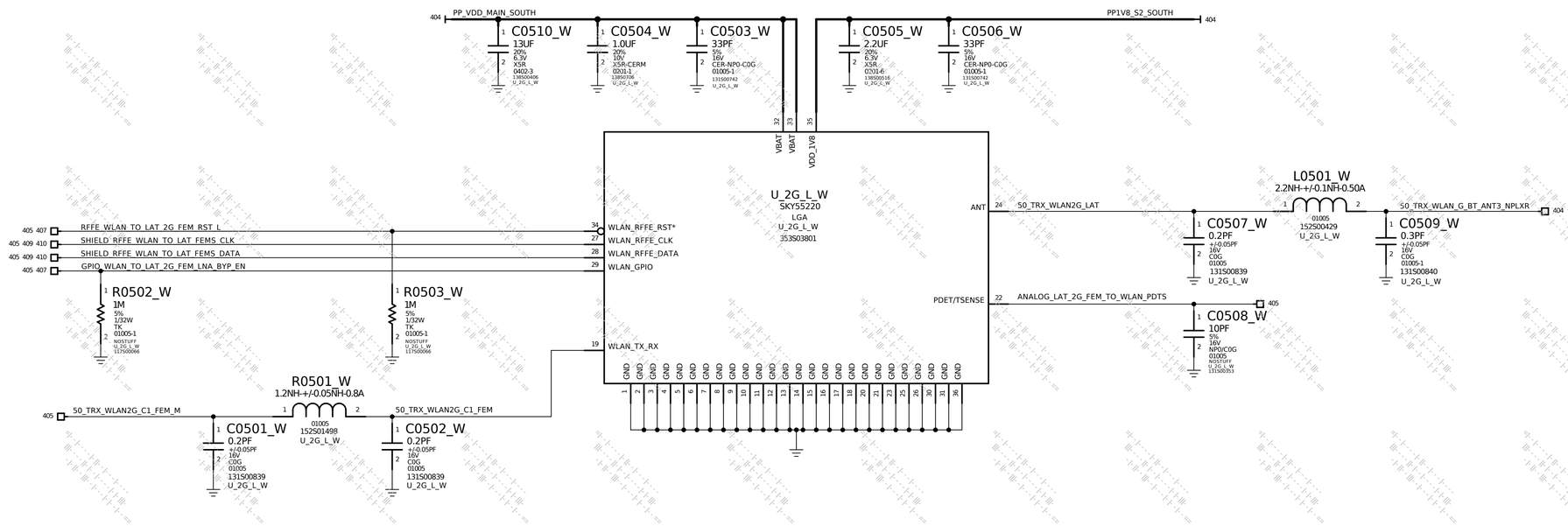

PAGE TITLE	2G4 rFEM (LAT) (5)
Apple Inc.	
DRAWING NUMBER	051-12836
SIZE	D
REVISION	4.0.0
BRANCH	proto-2
PAGE	5 OF 8
SHEET	91 OF 100

NOTICE OF PROPRIETARY PROPERTY:

THE INFORMATION CONTAINED HEREIN IS THE PROPRIETARY PROPERTY OF APPLE INC.
THE POSESSOR AGREES TO THE FOLLOWING:
I TO MAINTAIN THIS DOCUMENT IN CONFIDENCE
II NOT TO REPRODUCE OR COPY IT
III NOT TO REVEAL OR PUBLISH IT IN WHOLE OR PART
IV ALL RIGHTS RESERVED

UAT 2.4 GHZ RFEM

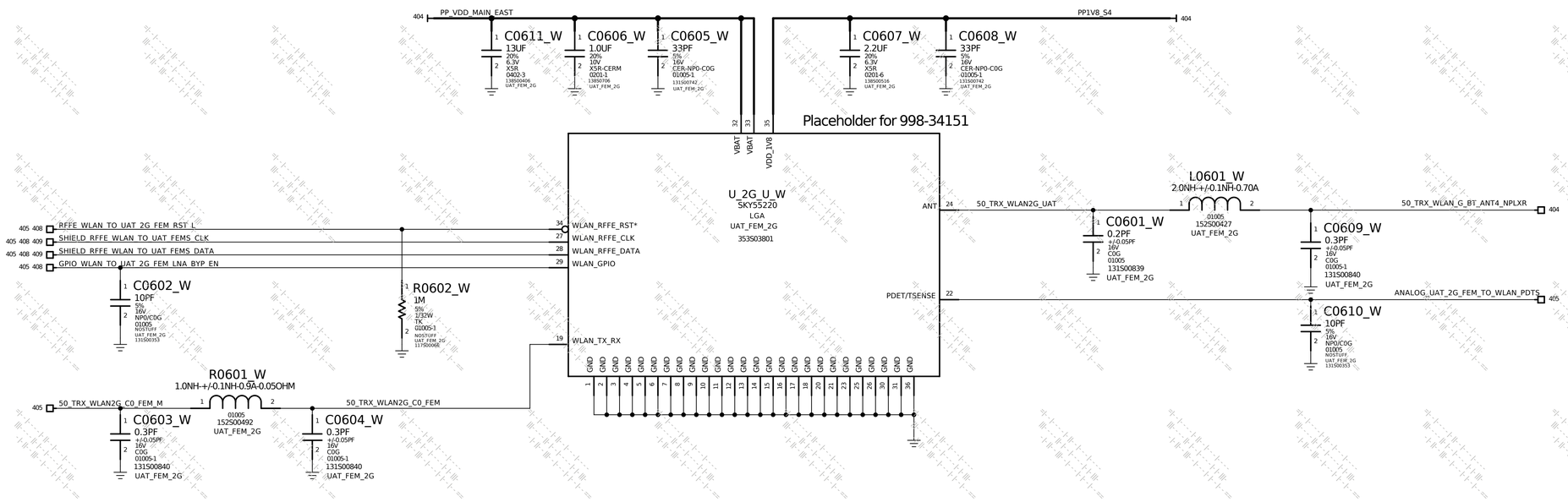

PAGE TITLE
2G4 rFEM (UAT) (6)

Apple Inc.

DRAWING NUMBER 051-12836
SIZE D
REVISION 4.0.0
BRANCH proto-2
PAGE 6 OF 8
SHEET 92 OF 100

NOTICE OF PROPRIETARY PROPERTY:
THE INFORMATION CONTAINED HEREIN IS THE PROPRIETARY PROPERTY OF APPLE INC.
THE POSESSOR AGREES TO THE FOLLOWING:
I TO MAINTAIN THIS DOCUMENT IN CONFIDENCE
II NOT TO REPRODUCE OR COPY IT
III NOT TO REVEAL OR PUBLISH IT IN WHOLE OR PART
IV ALL RIGHTS RESERVED

UAT 7GHz RFEM

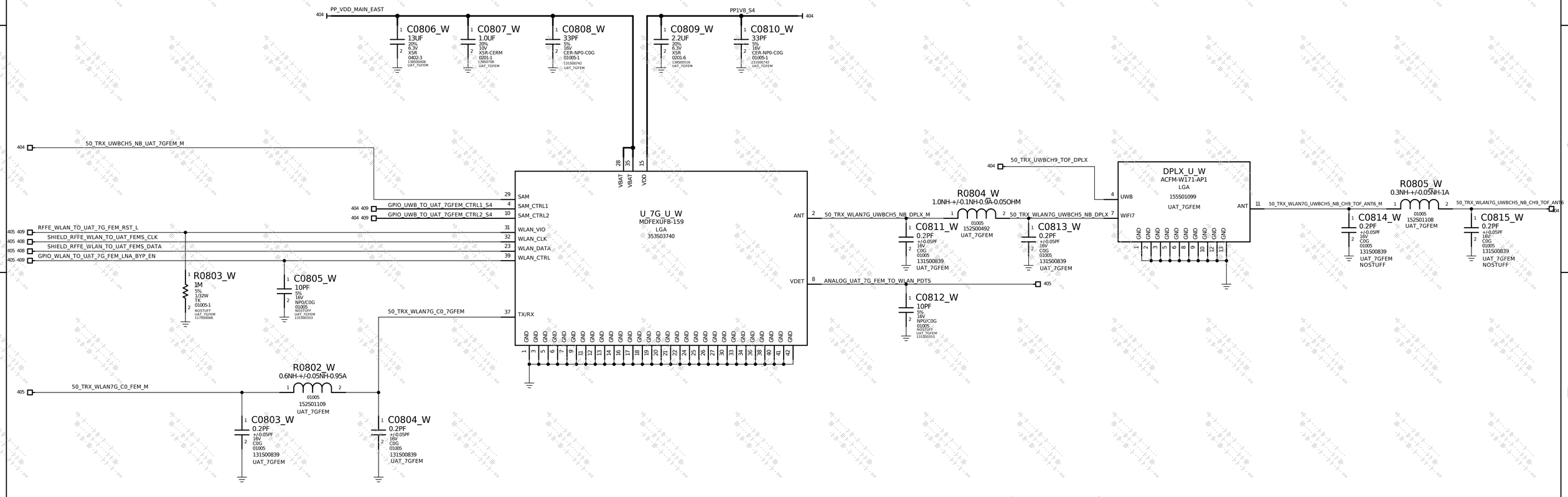

7G LAT FEM PP's are here

PAGE TITLE	7G rFEM (UAT) (7)
Apple Inc.	DRAWING NUMBER 051-12836 SIZE D
	REVISION 4.0.0
	BRANCH proto-2
	PAGE 7 OF 8
	SHEET 93 OF 100

NOTICE OF PROPRIETARY PROPERTY:
THE INFORMATION CONTAINED HEREIN IS THE PROPRIETARY PROPERTY OF APPLE INC.
THE POSESSOR AGREES TO THE FOLLOWING:
I TO MAINTAIN THIS DOCUMENT IN CONFIDENCE
II NOT TO REPRODUCE OR COPY IT
III NOT TO REVEAL OR PUBLISH IT IN WHOLE OR PART
IV ALL RIGHTS RESERVED

LAT 7GHz RFEM

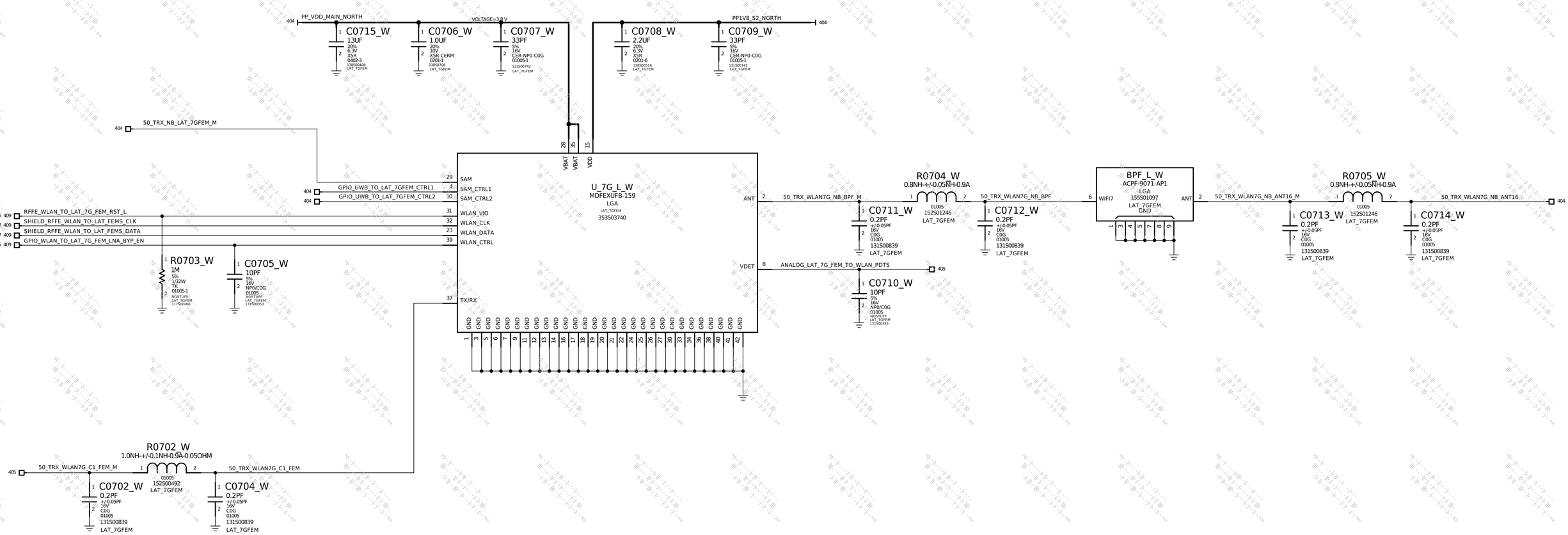

PAGE TITLE	7G rFEM (LAT) (8)
Apple Inc.	DRAWING NUMBER 051-12836 · SIZE D
	REVISION 4.0.0
	BRANCH proto-2
	PAGE 8 OF 8
	SHEET 94 OF 100

NOTICE OF PROPRIETARY PROPERTY:
THE INFORMATION CONTAINED HEREIN IS THE PROPRIETARY PROPERTY OF APPLE INC.
THE POSESSOR AGREES TO THE FOLLOWING:
I TO MAINTAIN THIS DOCUMENT IN CONFIDENCE
II NOT TO REPRODUCE OR COPY IT
III NOT TO REVEAL OR PUBLISH IT IN WHOLE OR PART
IV ALL RIGHTS RESERVED

REV	ECN	DESCRIPTION OF REVISION	CK APPD / DATE
4	0073816450	ENGINEERING RELEASED	2025-11-19

HIER_NFC_BG

V64 Fury P1 impedance: 6.56ohm+720nH; Lemc = 82nH, Cemc = 1560pF, Cs = 355pF, Cp = 80pF

V63 Fury P2 impedance: 6.79ohm+721.5nH; Lemc = 82nH, Cemc = 1380pF, Cs = 348pF, Cp = 117pF

SHEET	PAGE/CSA	CONTENTS	SYNC LABEL	SYNC DATE
1	1	TOC		
2	2	HIERARCHY_IOS		
3	3	NFC_F		
4	4	NFC_P		

SHEET	PAGE/CSA	CONTENTS	SYNC LABEL	SYNC DATE
5	5	NFC_F_FE		
6	6	NFC_P_FE		

ALTERNATE PART NO.	PRIMARY PART NO.	REFERENCE DESIGNATORS	COMMENT
152S01697	152S02259	L7502_I	IND,MLD,1UH,2.1A
152S01697	152S02259	L7502_S	IND,MLD,1UH,2.1A
197S00077	197S00206	Y7500_S	XTAL 27.12MHZ
197S00076	197S00206	Y7500_S	XTAL 27.12MHZ
131S00854	131S00150	C7530_I,C7530_S	Desense Capacitor
138S00124	138S00123	C7505_I,C7505_S,C7506_S,C7517_I,C7517_S,C7519_I,C7519_S	10uF Decoupling Capacitor

PRIMARY CHIP

PART NUMBER	REFERENCE DESIGNATORS	QTY	DESCRIPTION
998-37338	NFC_P	1	IC,LUNA,SN450V,A1,DEV,WLCSP86

RTM8.3 Primary EMC Matching

PRIMARY EMC:

PART NUMBER	BOMOPTION	REFERENCE DESIGNATORS	QTY	DESCRIPTION
131S00570	RTM7C.2	C7513_S,C7554_S	2	CAP,C0G,820PF,2%,50V,0201
131S00550	RTM7C.2	C7550_S,C7551_S	2	CAP,C0G,470PF,2%,50V,0201
152S02200	RTM7C.2	L7500_S,L7501_S	2	IND,MULT,75NH,4%,1.25A,120 MOHM,0402
131S00918	NOSTUFF	C7561_S,C7562_S	2	CAP,C0G,220PF,2%,25V,MUR,01005
131S00118	RTM7C.2	C7552_S,C7553_S	2	CAP,CER,NP0/C0G,180PF,+/-2%,50V,0201

RTM8.4 Primary EMC Matching

PRIMARY EMC:

PART NUMBER	BOMOPTION	REFERENCE DESIGNATORS	QTY	DESCRIPTION
131S00547	RTM8.4	C7554_S,C7513_S	2	CAP,C0G,1000PF,2%,50V,0201
131S00118	RTM8.4	C7552_S,C7553_S	2	CAP,CER,NP0/C0G,180PF,+/-2%,50V,0201
131S00567	RTM8.4	C7550_S,C7551_S	2	CAP,C0G,390PF,2%,50V,0201
152S02200	RTM8.4	L7500_S,L7501_S	2	IND,MULT,75NH,4%,1.25A,120 MOHM,0402

RTM8.4 FURY MATCHING

FURY CS:

PART NUMBER	BOMOPTION	REFERENCE DESIGNATORS	QTY	DESCRIPTION
131S00115	RTM8.4	C7512_I, C7543_I	2	CAP,CER,NP0/C0G,10PF,+/-2%,50V,0201
131S00565	RTM8.4	C7515_I, C7541_I	2	CAP,C0G,270PF,2%,50V,0201
131S00559	RTM8.4	C7514_I, C7542_I	2	CAP,CER,C0G,75PF,2%,50V,0201

FURY EMC:

PART NUMBER	BOMOPTION	REFERENCE DESIGNATORS	QTY	DESCRIPTION
131S00547	RTM8.4	C7510_I,C7513_I	2	CAP,C0G,1000PF,2%,50V,0201
152S02055	RTM8.4	L7500_I,L7501_I	2	IND,MULT,82NH,2.5%,0.55A,390 MO,0402
131S00568	RTM8.4	C7550_I,C7551_I	2	CAP,C0G,560PF,2%,50V,0201

FURY CP:

PART NUMBER	BOMOPTION	REFERENCE DESIGNATORS	QTY	DESCRIPTION
131S0730	NOSTUFF	C7547_I,C7567_I	2	CAP,CER,NP0/C0G,15PF,2%,50V,0201
131S00562	RTM8.4	C7546_I, C7566_I	2	CAP,CER,C0G,33PF,2%,50V,0201
131S0730	NOSTUFF	C7548_I,C7568_I	2	CAP,CER,NP0/C0G,15PF,2%,50V,0201
131S00017	RTM8.4	C7545_I,C7565_I	2	CAP,CER,NP0/C0G,47PF,+/-2%,50V, 0201

RTM8.3 FURY MATCHING

FURY CS:

PART NUMBER	BOMOPTION	REFERENCE DESIGNATORS	QTY	DESCRIPTION
131S0731	RTM7C.2	C7514_I,C7542_I	2	CAP,CER,C0G,100PF,2%,50V,0201
131S00118	RTM7C.2	C7512_I,C7543_I	2	CAP,CER,NP0/C0G,180PF,+/-2%,50V,0201
131S00017	RTM7C.2	C7515_I,C7541_I	2	CAP,CER,NP0/C0G,47PF,+/-2%,50V,0201

FURY EMC:

PART NUMBER	BOMOPTION	REFERENCE DESIGNATORS	QTY	DESCRIPTION
131S00568	RTM7C.2	C7510_I,C7513_I	2	CAP,C0G,560PF,2%,50V,0201
131S00570	RTM7C.2	C7550_I,C7551_I	2	CAP,C0G,820PF,2%,50V,0201
152S01028	RTM7C.2	L7500_I,L7501_I	2	IND,WW,84NH,2.5%,1.1A,0.09 OHM,0402
131S00526	NOSTUFF	C7561_S,C7562_S	2	CAP,C0G,68PF,2%,50V,01005

FURY CP:

PART NUMBER	BOMOPTION	REFERENCE DESIGNATORS	QTY	DESCRIPTION
131S0641	RTM7C.2	C7545_I,C7565_I	2	CAP,CER,NP0/C0G,56PF,2%,50V,0201
131S00562	RTM7C.2	C7546_I,C7566_I	2	CAP,CER,C0G,33PF,2%,50V,0201
131S00116	RTM7C.2	C7547_I,C7567_I	2	CAP,CER,NP0/C0G,27PF,+/-2%,50V,0201
131S00561	RTM7C.2	C7548_I,C7568_I	2	CAP,CER,C0G,24PF,2%,50V,0201

RTM8.4 PRIMARY MATCHING

PRIMARY CS:

PART NUMBER	BOMOPTION	REFERENCE DESIGNATORS	QTY	DESCRIPTION
131S00018	RTM8.4	C7555_S	1	CAP,CER,NP0/C0G,82PF,+/-2%,50V,0201
131S00803	RTM8.4	C7515_S	1	CAP,C0G,220PF,2%,50V,0201
131S00565	RTM8.4	C7514_S	1	CAP,C0G,270PF,2%,50V,0201

PRIMARY CP:

PART NUMBER	BOMOPTION	REFERENCE DESIGNATORS	QTY	DESCRIPTION
131S00017	RTM8.4	C7547_S	1	CAP,CER,NP0/C0G,47PF,+/-2%,50V,0201
131S00117	NOSTUFF	C7558_S	1	CAP,CER,NP0/C0G,120PF,+/-2%,50V,0201
131S00017	RTM8.4	C7548_S	1	CAP,CER,NP0/C0G,47PF,+/-2%,50V,0201
131S00547	RTM8.4	C7546_S	1	CAP,C0G,1000PF,2%,50V,0201
131S00118	NOSTUFF	C7559_S	1	CAP,CER,NP0/C0G,180PF,+/-2%,50V,0201

RTM8.3 PRIMARY MATCHING

PRIMARY CS:

PART NUMBER	BOMOPTION	REFERENCE DESIGNATORS	QTY	DESCRIPTION
131S0883	RTM7C.2-NK	C7514_S	1	CAP,CER,NP0/C0G,220PF,2%,50V,0201
131S00019	RTM7C.2-NK	C7515_S	1	CAP,CER,NP0/C0G,150PF,+/-2%,50V,0201
131S0731	RTM7C.2-NK	C7555_S	1	CAP,CER,C0G,100PF,2%,50V,0201
131S00565	RTM7C.2-K	C7514_S	1	CAP,C0G,270PF,2%,50V,0201
131S00118	RTM7C.2-K	C7515_S	1	CAP,CER,NP0/C0G,180PF,+/-2%,50V,0201
131S0641	RTM7C.2-K	C7555_S	1	CAP,CER,NP0/C0G,56PF,2%,50V,0201

PRIMARY CP:

PART NUMBER	BOMOPTION	REFERENCE DESIGNATORS	QTY	DESCRIPTION
131S00568	RTM7C.2	C7546_S	1	CAP,C0G,560PF,2%,50V,0201
131S0883	RTM7C.2-NK	C7547_S	1	CAP,CER,NP0/C0G,220PF,2%,50V,0201
131S00118	RTM7C.2-NK	C7548_S	1	CAP,CER,NP0/C0G,180PF,+/-2%,50V,0201
131S00117	NOSTUFF	C7559_S	1	CAP,CER,NP0/C0G,120PF,+/-2%,50V,0201
131S00565	RTM7C.2-K	C7547_S	1	CAP,C0G,270PF,2%,50V,0201
131S00565	RTM7C.2-K	C7548_S	1	CAP,C0G,270PF,2%,50V,0201
131S00019	RTM7C.2-NK	C7558_S	1	CAP,CER,NP0/C0G,150PF,+/-2%,50V,0201
131S00117	RTM7C.2-K	C7558_S	1	CAP,CER,NP0/C0G,120PF,+/-2%,50V,0201

V63 Primay P1 impedance (Average): 1.81ohm+92.98nH; Lemc = 75nH, Cemc = 1470pF, Cs = 600pF, Cp = 1200pF

V64 Primay P1 NK impedance: 1.81ohm + 97.2nH; Lemc = 75nH, Cemc = 1446pF, Cs = 572pF, Cp = 1094pF
V64 Primay P1 K impedance: 2.04ohm + 96.9nH; Lemc = 75nH, Cemc = 1446pF, Cs = 572pF, Cp = 1094pF

DRAWING TITLE: SCH,MLB,BG,V64

Apple Inc.

DRAWING NUMBER: 051-12836 SIZE: D

REVISION: 4.0.0

BRANCH: proto-2

PAGE: 1 OF 6

SHEET: 95 OF 100

NOTICE OF PROPRIETARY PROPERTY:
THE INFORMATION CONTAINED HEREIN IS THE PROPRIETARY PROPERTY OF APPLE INC.
THE POSESSOR AGREES TO THE FOLLOWING:
I TO MAINTAIN THIS DOCUMENT IN CONFIDENCE
II NOT TO REPRODUCE OR COPY IT
III NOT TO REVEAL OR PUBLISH IT IN WHOLE OR PART
IV ALL RIGHTS RESERVED

REV	ECN	DESCRIPTION OF REVISION	CK APPD / DATE
4	0073816450	ENGINEERING RELEASED	2025-11-19

NFC PRIMARY IO PORTS

PMU CONNECTIONS

412 414 IO PP_VDD_MAIN_NORTH VOLTAGE=3.8 V 412 414
412 414 IO PP1V24_NFC_S2 VOLTAGE=1.24 V 412 414
412 414 IO PP1V24_S4 VOLTAGE=1.24 V 412 414
412 414 IN GPIO_SEQ_PMU_TO_NFC_RST_L_S2 412 414

AOP CONNECTIONS

412 414 IN SPMI0_HEB_AOP_TO_BB_WLAN_NFC_UWB_CLK 412 414
412 414 IO SPMI0_HEB_AOP_BI_BB_WLAN_NFC_UWB_DATA_R3 412 414

WLAN/BT CONNECTIONS

412 414 IN I2C_S4_BT_TO_SE_SCL 412 414
412 414 OUT GPIO_SE_TO_BT_PKT_RDY_S4 412 414
412 414 IO I2C_S4_BT_BI_SE_SDA 412 414

UWB CONNECTIONS

412 414 IN I2C_S4_UWB_TO_SE_SCL 412 414
412 414 IO I2C_S4_UWB_BI_SE_SDA 412 414

ARCAMP CONNECTIONS

412 414 OUT GPIO_NFC_TO_ARCAMP_RESET_L_1V8_S4 412 414
412 414 OUT GPIO_NFC_TO_ARCAMP_TRIG_1V8_S4 412 414

Cell BB CONNECTIONS

412 414 OUT GPIO_NFC_P_TO_BBPMU_CLK_EN 412 414
412 414 IN CLK_BBPMU_TO_NFC_P_38M4 412 414

NFC RF

412 416 OUT NFC_P_ANT_POS 412 416

MISC

412 414 IO SWD_AP_TO_MANY_SWCLK2 412 414
412 414 OUT SWD_AP_BI_NFC_P_SWDIO 412 414
412 414 IO NTC_STOCKHOLM 412 414

SECURE BOOT

412 414 IN GPIO_AP_TO_NFC_FWMM 412 414
412 414 OUT GPIO_AP_FROM_NFC_P_BOOT_STOP 412 414
412 414 IN GPIO_AP_TO_SE_FWMM 412 414

NFC FURY IO PORTS

PMU CONNECTIONS

412 413 IO PP_VDD_MAIN_EAST VOLTAGE=4.9V 412 413
412 413 IO PP1V24_S2_NORTH VOLTAGE=1.24 V 412 413

AOP CONNECTIONS

412 413 IN GPIO_AOP_TO_NFC_F_IRONMAN_EN 412 413
412 413 IN SPMI0_HEB_AOP_TO_BB_WLAN_NFC_UWB_CLK 412 413
412 413 IO SPMI0_HEB_AOP_BI_BB_WLAN_NFC_UWB_DATA_R4 412 413

BASEBAND CONNECTIONS

412 413 IN CLK_BBPMU_TO_NFC_F_38M4 412 413
412 413 OUT GPIO_NFC_F_TO_BBPMU_CLK_EN 412 413

NFC RF

412 415 OUT NFC_F_ANT_POS 412 415
412 415 OUT NFC_F_ANT_NEG 412 415

MISC

412 413 OUT NFC_F_TEST_OUT 412 413

SECURE BOOT

412 413 IN GPIO_AP_TO_NFC_F_FWMM 412 413

PAGE_TITLE=NFC: TABLE OF CONTENTS

DRAWING TITLE: SCH,MLB,BG,V64

Apple Inc.

DRAWING NUMBER: 051-12836 SIZE: D
REVISION: 4.0.0
BRANCH: proto-2
PAGE: 2 OF 6
SHEET: 96 OF 100

NOTICE OF PROPRIETARY PROPERTY:
THE INFORMATION CONTAINED HEREIN IS THE PROPRIETARY PROPERTY OF APPLE INC.
THE POSESSOR AGREES TO THE FOLLOWING:
I TO MAINTAIN THIS DOCUMENT IN CONFIDENCE
II NOT TO REPRODUCE OR COPY IT
III NOT TO REVEAL OR PUBLISH IT IN WHOLE OR PART
IV ALL RIGHTS RESERVED

FURY NFC CONTROLLER

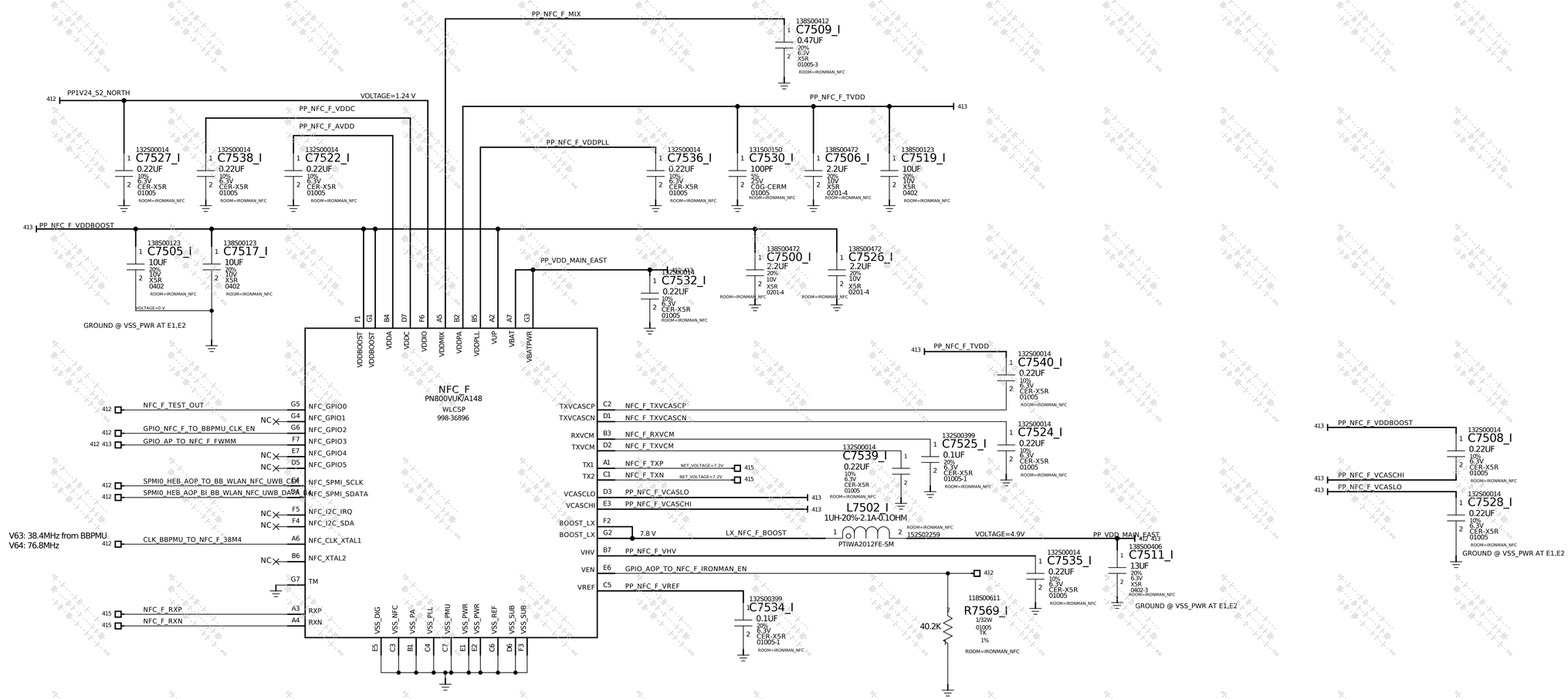

PAGE TITLE	NFC_F (3)
Apple Inc.	DRAWING NUMBER 051-12836 SIZE D
	REVISION 4.0.0
	BRANCH proto-2
	PAGE 3 OF 6
	SHEET 97 OF 100

NOTICE OF PROPRIETARY PROPERTY:
THE INFORMATION CONTAINED HEREIN IS THE PROPRIETARY PROPERTY OF APPLE INC.
THE POSESSOR AGREES TO THE FOLLOWING:
I TO MAINTAIN THIS DOCUMENT IN CONFIDENCE
II NOT TO REPRODUCE OR COPY IT
III NOT TO REVEAL OR PUBLISH IT IN WHOLE OR PART
IV ALL RIGHTS RESERVED

STOCKHOLM

PRIMARY NFC CONTROLLER

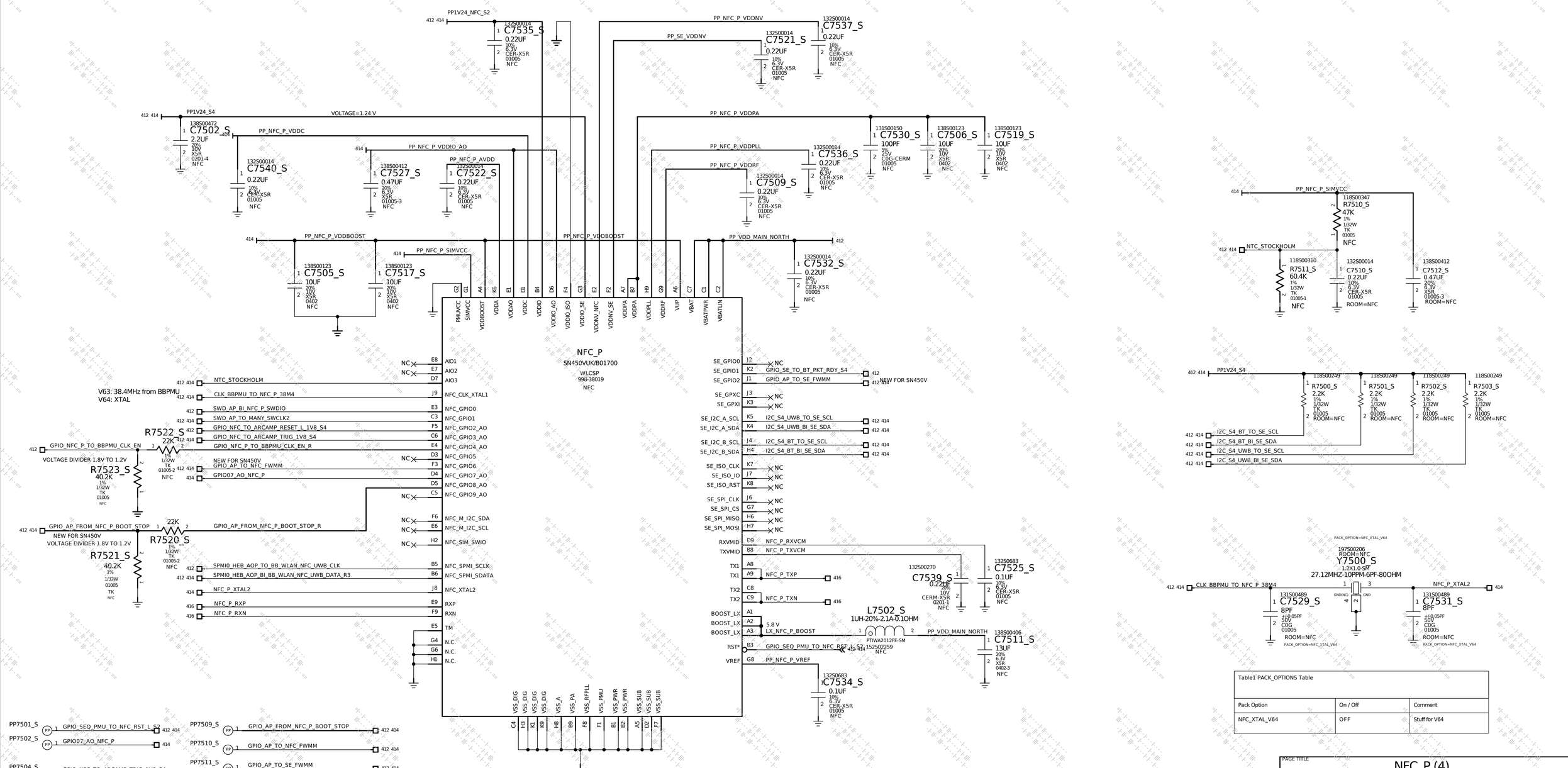

Table1 PACK_OPTIONS Table

Pack Option	On / Off	Comment
NFC_XTAL_V64	OFF	Stuff for V64

PAGE TITLE: NFC_P (4)

Apple Inc.

NOTICE OF PROPRIETARY PROPERTY:
THE INFORMATION CONTAINED HEREIN IS THE PROPRIETARY PROPERTY OF APPLE INC.
THE POSESSOR AGREES TO THE FOLLOWING:
I TO MAINTAIN THIS DOCUMENT IN CONFIDENCE
II NOT TO REPRODUCE OR COPY IT
III NOT TO REVEAL OR PUBLISH IT IN WHOLE OR PART
IV ALL RIGHTS RESERVED

DRAWING NUMBER: 051-12836 SIZE: D
REVISION: 4.0.0
BRANCH: proto-2
PAGE: 4 OF 6
SHEET: 98 OF 100

FURY NFC FRONT END

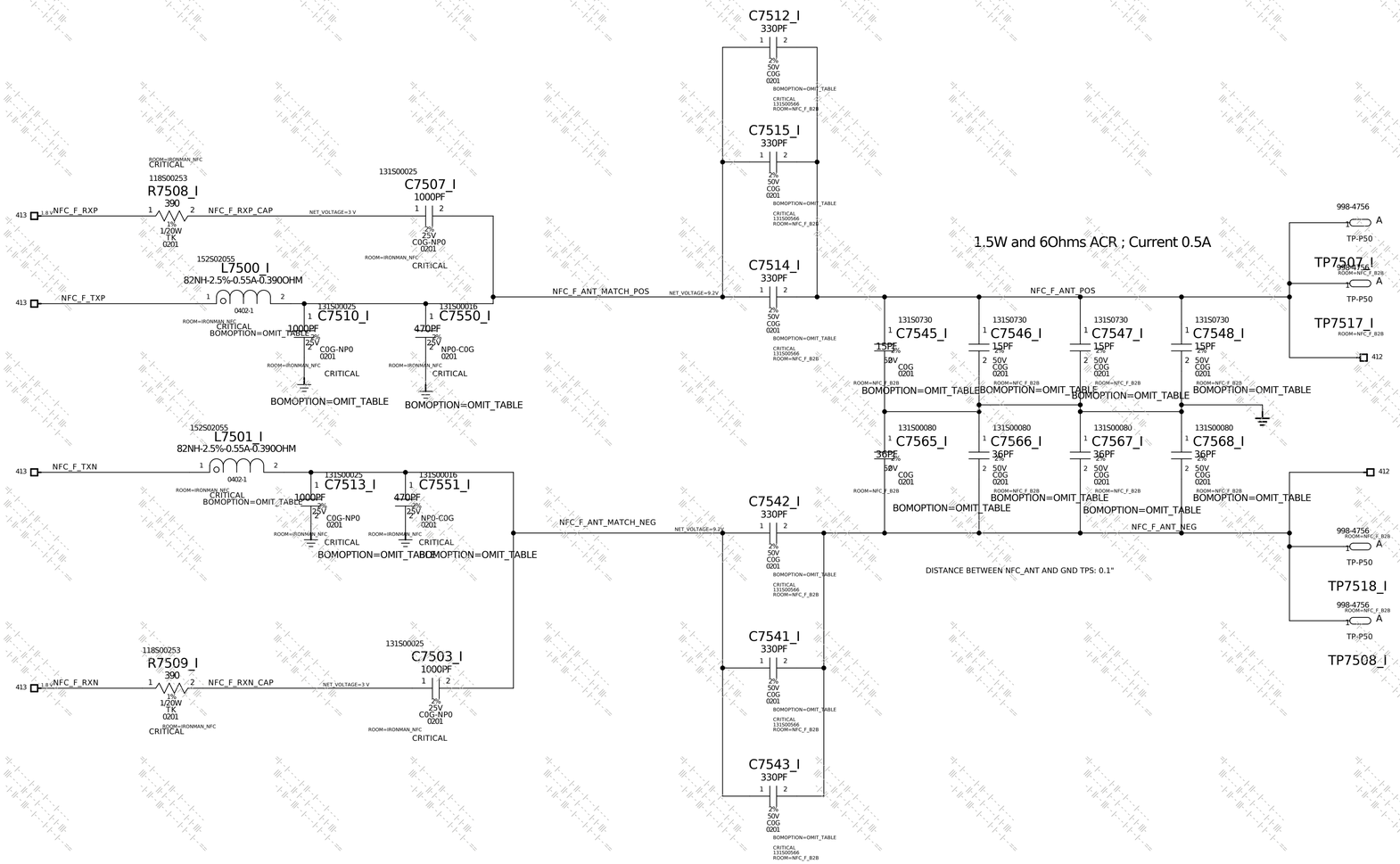

PAGE TITLE	NFC_F_FE (5)
Apple Inc.	DRAWING NUMBER 051-12836 SIZE D
	REVISION 4.0.0
	BRANCH proto-2
	PAGE 5 OF 6
	SHEET 99 OF 100

NOTICE OF PROPRIETARY PROPERTY:

THE INFORMATION CONTAINED HEREIN IS THE PROPRIETARY PROPERTY OF APPLE INC. THE POSESSOR AGREES TO THE FOLLOWING:

I TO MAINTAIN THIS DOCUMENT IN CONFIDENCE

II NOT TO REPRODUCE OR COPY IT

III NOT TO REVEAL OR PUBLISH IT IN WHOLE OR PART

IV ALL RIGHTS RESERVED

PRIMARY NFC FRONT END

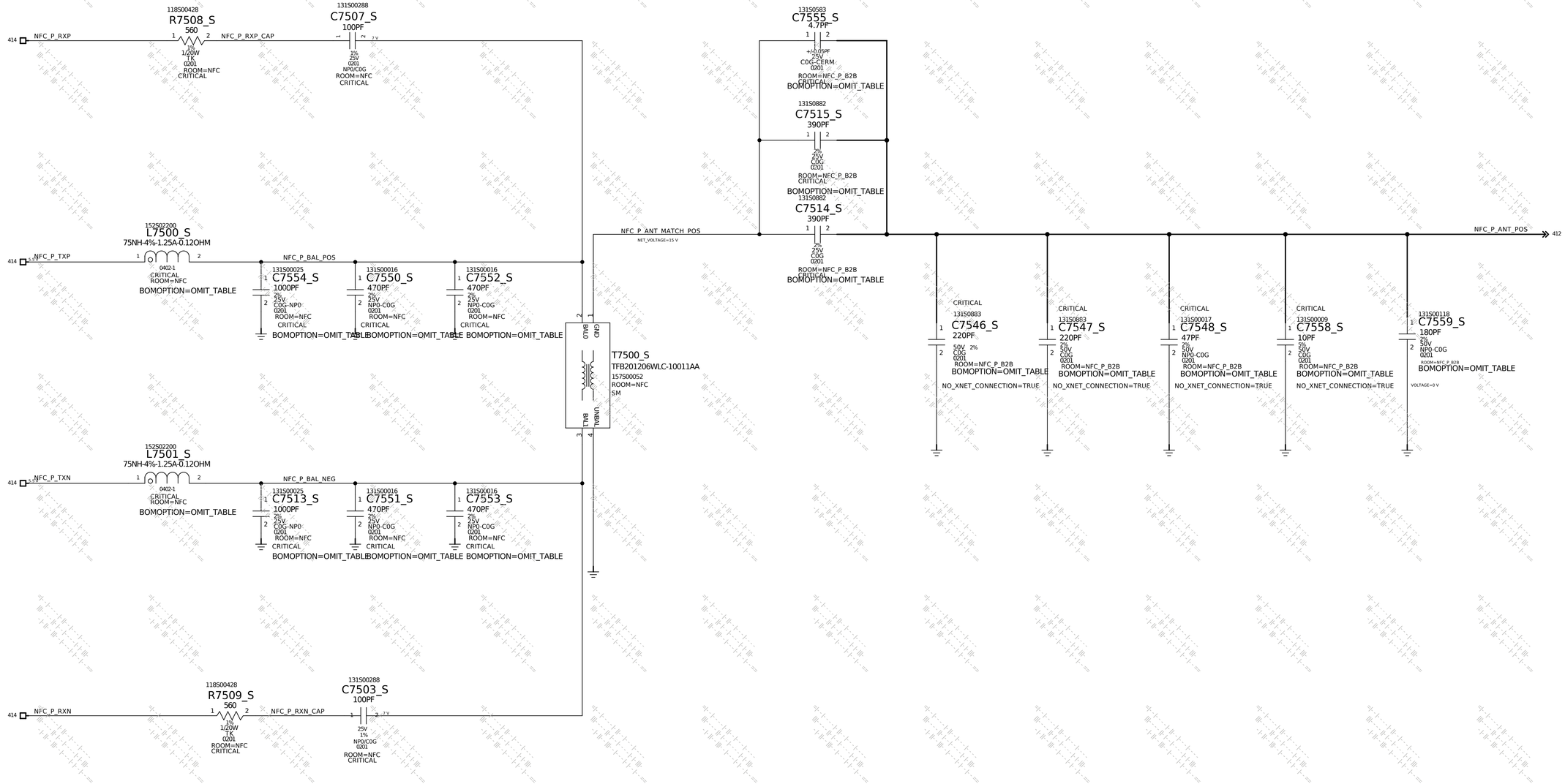

PAGE TITLE	NFC_P_FE (6)
Apple Inc.	DRAWING NUMBER 051-12836 SIZE D
	REVISION 4.0.0
NOTICE OF PROPRIETARY PROPERTY: THE INFORMATION CONTAINED HEREIN IS THE PROPRIETARY PROPERTY OF APPLE INC. THE POSESSOR AGREES TO THE FOLLOWING: I TO MAINTAIN THIS DOCUMENT IN CONFIDENCE II NOT TO REPRODUCE OR COPY IT III NOT TO REVEAL OR PUBLISH IT IN WHOLE OR PART IV ALL RIGHTS RESERVED	BRANCH proto-2
	PAGE 6 OF 6
	SHEET 100 OF 100